Appendix A

Vessel and Equipment Data Sheets

AMS RETRIEVER DAMEN SHOALBUSTER 2409

GENERAL

BASIC FUNCTIONS	Towing, Pushing, Anchor Handling, Dredge Support, Ploughing, Dive Support, Supply, Salvage, Survey
CLASSIFICATION	Bureau Veritas I HULL • MACH Tug Coastal Area. Temporary Unrestricted Navigation
CERTIFICATION	MCA Workboat Category 2, 60 nm MCA Loadline Exemption Irish Loadline Certificate Irish P5 Passenger Vessel Certificate
FLAG	UK
YEAR OF BUILD	1997

DIMENSIONS

LENGTH O.A.	24.80 m
BEAM O.A.	9.00 m
DEPTH AT SIDES	3.20 m
DRAFT AFT (LIGHT/FULL LOAD)	2.00/2.20 m
DISPLACEMENT (FULL LOAD)	255 tonnes
GROSS TONNAGE	94 tonnes
FREE DECK AREA	+/- 50 m^2

TANK CAPACITIES

FUEL OIL	59.0 m^3
FRESH WATER	33.0 m^3
LUBRICATION OIL	2.2 m^3
HYDRAULIC OIL	1.1 m^3
SEWAGE	3.5 m^3
BILGE WATER	3.5 m^3
DIRTY OIL	2.1 m^3

PERFORMANCE

BOLLARD PULL (CERTIFIED)	18.5 tonnes
SPEED (MAX)	9.5 knots
SPEED (ECON)	8.0 knots

PROPULSION SYSTEM

MAIN ENGINES	2 x Caterpillar 3412 DI-TA
TOTAL POWER	1014 bkW (1360 bhp) @ 1800 rpm
GEARBOXES	2 x Reintjes WAF 360/4.92 : 1
PROPULSION	2 x Promarin fixed pitch propellers
DIAMETER	2 x 1500 mm in Optima Nozzles

AUXILIARY EQUIPMENT

GENERATOR No.1	Hatz 4L41C Silent Pack
OUTPUT	35 kVA, 50 Hz, 230/400V
GENERATOR No.2	John Deere 6068 TF
OUTPUT	97 kVA, 50 Hz, 230/400V
TRANSFER PUMPS	For Fresh Water : SIHI 24 m^3/h at 2.5 bar For Fuel Oil : SIHI 34 m^3/h at 2.5 bar
FUEL OIL SEPARATOR	Facet MV 11 AG 1200 L/hr
HYDRAULICS	2 x Denison PW29 pumps - Engine driven

DECK LAY-OUT

ANCHOR WINDLASS	2 x Ridderinkhof CAW-H-136
ANCHORS	2 x 180 kg Pool (HHP)
CHAIN	2 x 120 m x 17.5 mm U2 Stud link
DECK CRANE	Heila 65/3s, 5.4 t @10.58 m, 13 t @ 4.6 m
TOWING/AH WINCH	Ridderinkhof TW-H-400-95 Split Drum
PULL	32 tonnes at 6m/min and 6 tonnes at 24m/min
WIRE CAPACITY	400 m dia. 32mm/75 m dia. 32mm
BRAKE HOLDING	40 tonnes on first layer
TOWING HOOK	Mampaey DCX 8/15
TOWING/AH PINS	BMM – SWL 50 tonnes

ACCOMMODATION

Heated and air-conditioned living spaces for 5 persons, consisting of a master's cabin, an officer's cabin and one three berth cabin, a galley and sanitary facilities.

NAVIGATION & COMMUNICATION EQUIPMENT

MAGNETIC COMPASS	Sestrel Observator MK 12
SATELLITE COMPASS	Furuno SC-50
RADAR	Raymarine e125 HD Digital
GPS	Furuno GP 80
AUTOPILOT	Anschutz Pilotstar D
AIS	Transas T105
ECHOSOUNDER	Furuno FE-700
VHF	2 x Sailor RT2048 with DSC
HANDHELD VHF	2 x Sailor, 1 x Jotron
NAVTEX	JRC NCR-333
MF/HF TRANSCEIVER	Furuno FS-1562 DSC
INMARSAT C	Furuno Felcom 12
SATELLITE PHONE	Thrane & Thrane Cobham
BRIDGE WATCH ALARM	NavGard BNWAS
CCTV	MCB H 264
INTERCOM	Vingtor VRC-110M
SEARCHLIGHTS	2 x Francis

SAFETY FIRST
ALPHAMARINE
S RETRIEVER

IMO 8944381
AMS RETRIEVER
ALPHAMARINE

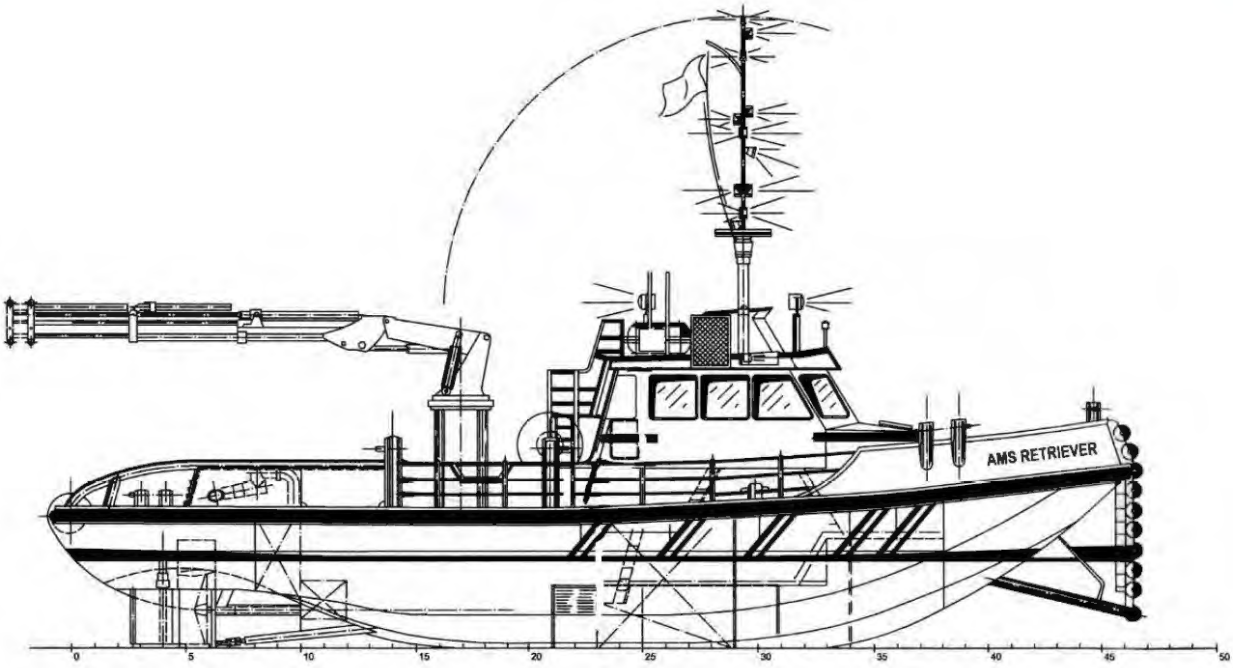
AMS RETRIEVER
0
5
10
15
20
25
30
35
40
45
50

FUGRO
M.V. FUGRO PIONEER

M.V. Fugro Pioneer has been built to the highest standards demanded of a modern internationally operating multi-purpose survey vessel.

The diesel electric propulsion, specially designed hull, resilient engine mounts and rudder propellers maximise station keeping and navigational control while ensuring acoustically quiet running at survey speeds.

Designed with consideration for safety and environment, Fugro Pioneer is a compact flexible platform supporting a wide range of offshore services with a typical operational profile of geophysical, geotechnical survey operations up to 500 m WD.

Its limited 3 m draft adds to its capabilities to operate in shallow water nearshore. The vessel can easily be configured to support light ROV and environmental operations.
The 53 metre-long vessel is prepared for dynamic positioning and equipped with state-of-the-art survey equipment.

State of the Art Kongsberg Dual Head Dual Ping Multibeam in retractable moonpool system

Limited draft makes it specifically suitable for survey nearshore

M.V. FUGRO PIONEER

Technical Specifications

General

Names	Fugro Pioneer
Classifications society	BV
Flag state/ port	Bahamas Maritime Authority / Nassau
Build(er)	September 2014 – Damen Shipyards Galati
IMO/Cal sign	9701645 / C6BH3
Official number	7000674

Dimensions

LOA	53.7 m
Beam	12.5 m
Draft (summer) max.	3.1 m + 0.26 m blister
Net tonnage	1,322 T
Deck area aft	250 m^2
Deck strength	5 T / m^2
Deck load	81,6 T

Machinery

Propulsion	2 x Azimuth thrusters (electric)
Bowthrusters	1 x Tunnel thrusters (electric)
Cruising speed	10 kn
Survey speed	Variableas required
Maximum speed	11.2 kn

Electric power

Diesel generator sets	4 x 372 kW
UPS supply survey	1 x 30 kVA, 220 vac

Capacities

Fuel capacity	305 m^3
Fuel consumption (FOC t/day)	Survey 3 T / Stationary (DP) 4.2 T / Transit 6 T
Potablewater capacity	115 m^3
Watermaking	6 m^3 / d

Accommodation

Cabins	30+4 bunks / 10 x single cabins, 11 double cabins
Crew (typical)	13 x marine crew, 18 x survey crew
Recreational	1 x dayroom, 1 x gym
Work offices	2 x survey, 1 x meeting room

Control and navigation

DP system	Imtech DP-0
Radar	Sperry Marine Visionmaster FT CAT 1 / 2 S-band and X-band
Electronic chart	ECDIS Transas (double)
DGPS	1 x Koden KGPGZO / 2 x Fugro Starpack
Magnetic compass	Sperry Jupiter

Deck machinery

Deck crane aft	Palfinger PK65002 MD
Storage crane forward	Palfinger PK15000 MC
Hydraulics ring main system	300 bar / 200 ltr
T-frame aft (geophysical)	1 x 2 / 3 T SWL
A-frameside(geotechnical)	1 x 9 T SWL
CTD winch / davit	1 x 200 kg / 1000 m (environmental sampling)
Tugger winch aft deck	4 x 3 T SWL
Moonpool	Rectangular 1630 x 883 mm (freespace)
Geophysical tow winch	2 x EMCE (3.5 Te / 1000 m / Rochester)
Geotechnical hoistingwinch	1 x EMCE (9 Te / 1500 m / 19 mm)

Communications

GMDSS	Motorola- 3 x VHF handheld
Vsat	2 x Seatel 5009 Ku-band
Iridium	Iridium Openport (Fall back)
UHF/ VHF radios (operational coms)	Motorola- 2 x VHF handheld / 3 x UHF mobile / 9 x UHF portable
CCTV camera system	Orlaco
TVRO	Intellian t40W

Safety

MOB boat	RIB
Liferafts	6 x 20 persons
Survival suits & life jackets	44 pcs
Lifeline Pulley System	Yes
Personal Locator Beacons (PLB)	Ocean M100

Survey equipment

DGPS positioning	Fugro Starfix Starpacks
Navigation package	Fugro Starfix Suite
Acoustic positioning	KongsbergHiPap 501 incl Cymbal
Motion Reference Unit	Hydrins + Octans
Echosounder	Simrad EA400
Draft monitoring	2 x Rosemount Pressure Sensors
Multibeam echosounder	Kongsberg Maritime EM 2040 (Dual head/ Dual ping)
Side Scan Sonar	Edgetech 4200FS Dual frequency (different permutations of dual frequency subject to requirements)
Sub Bottom Profiler	Innomar Medium / Massa array 4 x 4 c.w. SES transceiver
Magnetometer	Geometrics G-882 / EIVA 3D Scanfish Katria / Fugro Geowing
Seismic compressor	Hamworthy 185E MK2 / 2 x Wärtsilä Water Systems Ltd
2D & 3D UHR Seismic	as required
Geotechnical sampling	Vibro coring CPT sampling
Environmental sampling	as required

FUGRO.COM/CONTACTS

© FUGRO EUAF/MSC/1120

G-882
Cesium Marine Magnetometer

GEOMETRICS
Innovation • Experience • Results

Geometrics' G-882 Marine Magnetometer is the leading marine system in the industry with over 1,000 systems sold! The G-882 is the only system that meets the standards for UXO clearance in the North Sea.

This very high-resolution Cesium vapor marine magnetometer is low in cost, small in size, and offers flexibility for professional surveys in shallow or deep water. Use your personal computer with our MagLog™ software to log, display and print GPS position and magnetic field data.

The system directly interfaces to all major side-scan manufacturers for tandem tow configurations. Being small and lightweight, it is easily deployed and operated by one person. But add several streamlined weight collars and the system can quickly weigh more than 100 lbs for deep-tow applications.

This marine magnetometer system is particularly well-suited for the detection and mapping of all sizes of ferrous objects. This includes anchors, chains, cables, pipelines, ballast stones and other scattered shipwreck debris, munitions of all sizes (UXO), aircraft, engines and any other object with a magnetic expression. The G-882 is also perfect for geological studies. Its high sensitivity and high sample rates are maintained for all applications.

Objects as small as a 5-inch screwdriver are readily detected provided that the sensor is close to the seafloor and within practical detection range (refer to table on back).

FEATURES & BENEFITS

- **Cesium Vapor High Performance** – Highest detection range and high probability of detecting all sized ferrous targets.
- **Streamlined Design for Tow Safety** – Low probability of fouling in fishing lines or rocks. Rugged fiber-wound fiberglass housing.
- **Sample at up to 20Hz** – Unparalleled data density while also covering larger areas per day.
- **Sensor can be Rotated for Optimal Signal** – Can be used worldwide.
- **Easy Portability and Handling** – No winch required. Built-in easy-carry handle. Operable by a single man; only 44 lb with 200 ft cable.
- **Combine Multiple Systems for Increased Coverage** – Internal CM-221 Mini-counter provides multi-sensor sync and data concatenation, allowing side-by-side coverage which maximizes detection of small targets and reduces noise.
- **Export Version Available** – Use anywhere in the world without need for an export license (except embargoed countries). See specifications.

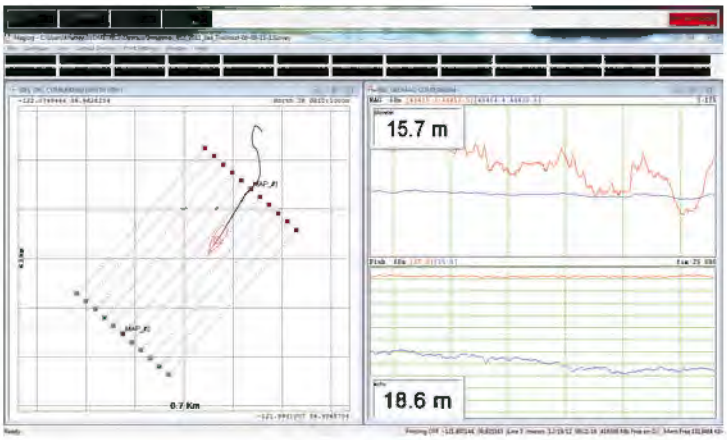

MagLogLite™ Data Logging software is included with each magnetometer and allows recording and display of data and position with automatic anomaly detection. Additional software options include: MagLog Pro™, advanced logging software; MagMap™, a plotting and contouring package; and MagPick™ post-acquisition processing software.

MAGNETOMETER / ELECTRONICS

Operating Principle: Self-oscillating split-beam Cesium vapor (non-radioactive).

Operating Range: 20,000 to 100,000 nT.

Operating Zones: The earth's field vector should be at an angle greater than 10° from the sensor's equator and greater than 6° away from the sensor's long axis. Automatic hemisphere switching.

Noise: <0.004 nT/$\sqrt{Hz}_{rms}$. (SX (export) version: <0.02 nT/$\sqrt{Hz}_{rms}$).

Max Sample Rate: 20 Hz.

Heading Error: < 1 nT (over entire 360° spin).

Output: RS-232 at 1,200 to 19,200 Baud.

Power: 24 to 32 VDC, 0.75 A at power-on and 0.5 A thereafter.

MECHANICAL

Sensor Fish

DIA: 7 cm; L: 137 cm (2.75x54 in) (with fin assembly).
Weight: 18 kg (40 lb).

Includes sensor and electronics and 1 main weight. Additional collar weights are 6.4 kg (14 lb) each; total of 5 capable.

Tow Cable

DIA: 12 mm; L: 800 m (0.47 in x 2,625 ft).
Weight: 7.7 kg (17 lb) with terminations.
Break strength: 1,630 kg (3,600 lb)
Bend diameter: 30 cm (12 in).

Typical Detection Range for Common Objects

1.	Ship: 1000 tons	0.5 to 1 nT at 800 ft (244 m)
2.	Anchor: 20 tons	0.8 to 1.25 nT at 400 ft (120 m)
3.	Automobile	1 to 2 nT at 100 ft (30 m)
4.	Light Aircraft	0.5 to 2 nT at 40 ft (12 m)
5.	Pipeline (12 inch)	1 to 2 nT at 200 ft (60 m)
6.	Pipeline (6 inch)	1 to 2 nT at 100 ft (30 m)
7.	Iron: 100 kg	1 to 2 nT at 50 ft (15 m)
8.	Iron: 100 lb	0.5 to 1 nT at 30 ft (9 m)
9.	Iron: 10 lb	0.5 to 1 nT at 20 ft (6 m)
10.	Iron: 1 lb	0.5 to 1 nT at 10 ft (3 m)
11.	Screwdriver: 5-inch	0.5 to 2 nT at 12 ft (4 m)
12.	Bomb: 1000 lb	1 to 5 nT at 100 ft (30 m)
13.	Bomb: 500 lb	0.5 to 5 nT at 50 ft (16 m)
14.	Grenade	0.5 to 2 nT at 10 ft (3 m)
15.	Shell: 20 mm	0.5 to 2 nT at 5 ft (1.8 m)

ENVIRONMENTAL

Operating Temperature: -35°C to +50°C (-30°F to +122°F).

Storage Temperature: -45°C to +70°C (-48°F to +158°F).

Altitude: 9,000 m (30,000 ft).

Depth: 4,000 psi (2,730 m; 8956 ft).

Water Tight: O-Ring sealed for up to 4,000 psi depth operation.

ACCESSORIES

Standard: Operation manual, shipping/storage container, ship kit with tools and hardware, power supply, MagLogLite™, MagMap™ and MagPick™ processing software, depth transducer, altimeter.

Optional: Steel tow cable to 6,000 m (19,600 ft) with telemetry, longitudinal or transverse gradiometer, plastic Pelican® case, MagLogPro™, collar weights.

Specifications subject to change without notice. G-882_v1 (0118)

GEOMETRICS
Innovation • Experience • Results

GEOMETRICS INC. 2190 Fortune Drive, San Jose, California 95131, USA
Tel: 408-954-0522 • Fax: 408-954-0902 • Email: sales@geometrics.com

GEOMETRICS EUROPE 20 Eden Way, Pages Industrial Park, Leighton Buzzard LU7 4TZ, UK
Tel: 44-1525-383438 • Fax: 44-1525-382200 • Email: chris@georentals.co.uk

GEOMETRICS CHINA Laurel Geophysical Instruments Limited
8F. Building 1 , Damei Plaza, 7 Qingnian Road, Chaoyang District, Beijing, 100025 China
Tel: +86-10-85850099 • Fax: +86-10-85850991 • laurel@laurelgeophysics.com.cn

GEO OCEAN IV

Offshore Survey & Support Vessel

Picture: Port of Ostend

SUPPORT ACTIVITIES / VESSEL CAPABILITIES

The GEO OCEAN IV is a multi-disciplined Offshore Survey Vessel. With specifically selected equipment and capabilities for North Sea Survey and Support activities, she is the ideal candidate for the Oil & Gas and Renewable sectors .

GEOxyz | T: +32 (0) 56 70 68 48 | info@geoxyz.eu | www.geoxyz.eu

GEO OCEAN IV

Offshore Survey & Support Vessel

TECHNICAL SPECIFICATION

General

Name	Geo Ocean IV
Port Registry	Luxembourg
Call Sign	LXHD
IMO Number	8704858
MMSI	253641000
Classification	BV
Vessel Type	Survey Vessel SV
Special Service:	Standby/Resue Vessel, Guard vessel
Unrestricted navigation	

Dimensions and Construction

Built:	Johs Kristensen Skibsbyggeri - Denmark 1989 (Conversion 2001/2010/2019)
LOA:	41,90 m
Width Moulded:	9,10 m
Draught Moulded:	5,2 m
Gross Tonnage:	723

Accommodation

Total Berths:	20 persons
Total Cabins:	19
Single cabins with shower and toilet:	13 x 1 person
Double cabins with shower and toilet:	6 x 2 persons

Crew

Min. Safemaning:	6 crew + 1cook
Min. standby maning:	6crew
MCA Standby:	12 crew

Capacities & delivery Rates

Main Deck area:	110 m^2
Max Deck Loading	15 tons

Safety Equipment

Search Lights:	1x 5000w with remote control from 3 positions 2x 1000w with manual handling
Helicopter Winch zone:	Free operational area on forecastle deck Second zone on aft deck
Rescue crafts:	Viking 4x25 persons

Fast Rescue Craft

1x ESVAGT STB 15C with modified forecastle to secure maximum transfer capabilities of personnel and goods. Rescue craft, self righting, rigid wiht inflatable tubes and with 2x 140HP Volvo Penta Diesel inboards. SOLAS approved for 15 persons.

Rescue capacity:	100 persons

Propulsion & Machinery

Main propulsion:	High screw CP-propeller - no nozzle
Main Engine:	1 x 1,860 KW Wärtsila 12V 25F derated from 2900 KW, New 1992
Gear:	Reintjes gearbox for 1860 KW
Thrusters:	Retractable azimut 450 KW independent driven by Cummins KTA19 diesel engine Brunvoll 184 KW Stern thruster, Brunvoll 184 KW Bow thruster,
Generators:	Mitsubishi 1x450kVA 380V 50Hz (aft engine room) Cummins 1x165kVA 380V 50Hz (fore engine room)
Emergency generator:	1 Valmet 80kVA 380V 50Hz

Speed & Consuption (Information only)

Approx. 13 kts	5m^3/ day
Approx. 10 kts	2,5m^3/day
Approx. 7 kts	1,7m^3/day
Standby	1m^3/day

Tank capacity

Fuel capacity	87m^3
Drill Water	57m^3
Potable water	68m^3

Deck Equipment and Cranes

Winches:	1x 6t Hägglund anchor winch, type HOH2165 1x 14t Hägglund gilson winch, type HDH436,8
Crane:	1x Amco Veba 823M sea crane (12t/m) 1x1500HP hydr. Gear off the PTO

Electronics:

Radar:	Deca Bridgemaster Koden MD-3604
Echo sounder	Simrad skipper colour
Fuel Meter	OB 991
Radio Telephone	Skanti 400W
VHF	3x Sailor Compact RT 2048 3x Handheld VHF
UHF	Jotron Transiver Type Tr6102
Alarm System	OB 481
GPS Navigator	Koden KGP-900 Furono GP-50 MK3
Autopilot	Koden KS538
AIS	Furuno Universal FA-100
Electronic Seachart	Maxsea
Log	Simrad NL

Survey Sensors

MBES	Kongsberg EM2040-04 Dual Head
Single Beam	TC2122
Sound Velocity Sensor	AML Basic X2
Sidescan Sonar	Edgetech 4200
Sub Bottom Profiler	Dual Neptune with Silas EBP

GEOxyz | T: +32 (0) 56 70 68 48 | info@geoxyz.eu | www.geoxyz.eu

All particulars believed to be correct but not guaranteed GEOxyz bvba cannot be held liable for any possible incorrect information

GEOSURVEYOR XI

Survey & Support Vessel

SUPPORT ACTIVITIES / VESSEL CAPABILITIES

- Site investigations
- Diving & ROV support
- Geophysical surveys
  - multibeam
  - singlebeam
  - high resolution seismic
  - side scan sonar
  - magnetometry
- Cable & Pipe route surveys
- Wreck investigations
- Environmental surveys
- Bottom and sediment sampling
- Density and shear strength measurements

GEO xyz bvba | Harelbeekstraat 104D | B-8550 Zwevegem | Belgium
T: +32 (0) 56 70 68 48 | F: +32 (0) 56 75 46 74 | info@geoxyz.be | www.geoxyz.eu

GEOSURVEYOR XI

Survey & Support Vessel

TECHNICAL SPECIFICATION

General

Name	Geosurveyor XI
Classification	MCA Cat. 2 - 60 miles
Built	1988 by I.D.P. Belgium
Hull material	Steel
Port / Flag	London
Call Sign	ORVI
Type vessel:	Seagoing Survey Vessel

Dimensions

Overall Length	21,11 m
Width	6,40 m
Draft	2,00 m
Hight above waterline	13,00m
Gross Tonnage	83 Tons

Accomodation

Cabins	4 berth cabin / Galley / Toilet & Shower
Licenceced for	12 passengers + 2 crew
Electrical Systems	380 volt / 220 volt

Machinery

Main engines	2x Caterpilar 3406B
Propulsion	Twin fixed Propellors
Power output	554KW/752 BHP at 1800rpm
Cruising speed	11 knots
Deck Crane	HIAB 120 - 5,3t on 2,00M 1,4t on 8,20m

Tank Capacities

Fresh Water	3000 ltr
Fuel	22000 ltr

Control and navigation

Radars	JMA 5110 JMA 2254 JRC auxiliary radar
GPS Navigator	Raymarine C120
Echosounder	Raytheon
Loudhailer	Raytheon
AIS	JHS182
Gyrocompass/motion sensor	Ixsea Octans FOG

Communications

VHF	Liton TR 4822 / Sailor RT2048
Emergency handset	Sperry 3110

Safety

Liferafts/Lifejackets	According to class

Survey Equipment

GNSS	Trimble BD982
Motion sensor	Ixsea Octans
Sound Velocity Profiler	Valeport Swift
Multibeam	EM2040C-D
Singlebeam	Odom CV200
Modem	Robustel 4G Modem

GEO xyz bvba | Harelbeekstraat 104D | B-8550 Zwevegem | Belgium
T: +32 (0) 56 70 68 48 | F: +32 (0) 56 75 46 74 | info@geoxyz.be | www.geoxyz.eu

GEOxyz bvba cannot be held liable for any possible incorrect information

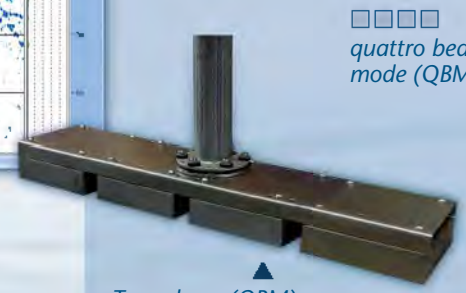

SES-2000 quattro

Parametric Sub-bottom Profiler

▶ Performance
- water depth range:
  SBM: 1 – 500 m
  QBM: 0.5 – 30 m
  (depends on array geometry)
- sediment penetration:
  SBM: up to 50 m
  QBM: up to 20 m
- layer resolution: up to 5 cm
- motion compensation: heave
- beam width @ 3 dB for all frequencies:
  SBM: ±1.5° / footprint < 5.5 % of water depth
  QBM: ±2.5° / footprint < 9.0 % of water depth

▶ Transmitter
- primary frequencies:
  approx. 100 kHz (band 85 – 115 kHz)
- secondary low frequencies:
  4, 5, 6, 8, 10, 12, 15 kHz (band 2 – 22 kHz)
- primary source level:
  SBM: > 245 dB//µPa re 1 m
  QBM: > 235 dB//µPa re 1 m
- pulse width: 0.07 – 1 ms
- pulse rate:
  SBM: up to 60/s
  QBM: up to 15/s per transducer
- multi-ping mode (SBM)
- pulse type: CW, Ricker

▶ Acquisition
- primary frequency
  (echo sounder, bottom track)
- secondary low frequency
  (sub-bottom data, multi-frequency mode)
- sample rate 96 kHz @ 24 bit

▶ System Components
- transceiver unit 19 inch / 6 U
  (WHD: 0.52 m x 0.30 m x 0.40 m; 32 kg)
- transducer excl. 15 m cable
  (WHD: 4 x [0.21 m x 0.06 m x 0.21 m];
  4 x 5 kg)
- system control: internal PC

▶ Software
- SESWIN data acquisition software
- SES Convert SEG-Y/XTF data export
- SES NetView remote display
- ISE post-processing software
- 3D volume renderer

▶ Power Supply Requirements
- 100 – 240 V AC / 50 – 60 Hz
- power consumption: < 300 W

Innomar

www.innomar.com

TRUSTED OFFSHORE GEOTECHNICAL SOLUTIONS

DINA POLARIS

Introduction

The Dina Polaris is a 2017 build, DP2 vessel, specially designed for offshore installation services in harsh weather conditions. The Dina Polaris is an ice class vessel constructed according to Baltic rules allowing her to operate in cold climate environments in ice thickness up to 0.8m. Certificated Clean Design she was designed and built to minimise her working footprint on the environment. Geoquip Marine's twin derrick fully heave compensated GMTR120 drilling rig has been installed over the 7.2m^2 midship moon pool. At 99m length and 21m beam she is one of the largest geotechnical vessels currently available in the industry, creating an extremely stable platform, allowing seabed PCPT equipment and ROV to be mobilised alongside the GMTR120.

Positioning

DP2 System Installed: ICON by Rolls-Royce (Autoposition, Auto Track, Follow Target, Joystick System), Reference Systems (DGPS, CyScan, RADAscan, HiPAP501)

Key Features:

- Class 2 Dynamic Positioning
- Clean design vessel minimising carbon footprint
- Ice class vessel
- Heave compensated deep water drilling rig
- Combined water and borehole depth of 2,500m
- Downhole push/piston sampling
- Downhole APvdB Piezocone Penetration Testing (PCPT)
- Comprehensive on board soils testing laboratory
- 97 berths, 5 offices and one conference room
- Built in hangars for WROV, port and starboard

On Board Laboratory

The Dina Polaris has been fitted with Geoquip Marine's soil laboratory. The laboratory is equipped with the necessary tools to conduct standard soil testing experiments. Routine sample handling, photography, classification and storage are part of the everyday work process in the laboratory. The scope of work performed on the sample can vary depending on the client or project. Lab experiments that can be performed include:

- Water content, bulk and dry density
- Qualitative carbonate content
- Laboratory vane
- Fall cone
- Torvane
- Pocket penetrometer
- Unconsolidated Undrained (UU) triaxal
- Point load (determination of $Is_{(50)}$ for rock)

Recovered samples are stored in a temperature controlled environment prior to shipment to an onshore facility.

DINA POLARIS	
Flag, IMO, Call Sign	Norway, IMO: 9765031, Call Sign: LAXB7
Class	DnV + 1A1, SF, E0, OFFSHORE SERVICE VESSEL, DK(+), HL(2,8), CLEAN DESIGN, NAUT OSV(A), RECYCLABLE, BWM-T, ECA(SOx-A), LFL(*), COMF V(3)C(3), DYNPOS AUTR, SPS, ICE 1A, WINTERISATION BASIC
Built	Besiktas, Turkey # 75, 2017
Tonnage	GRT 6966 NRT 2089 Deadweight at 7,08 m 6018 t
Principal Dimensions LOA Breadth (moulded) Depth (to main deck) Draft (max) SF	 98.90 m 21.00 m 8.60 m 7.08 m
Fuel Capacity	2500 m^3
Machinery Main Engines Generators Harbour Generator Bow Thrusters Azimuth Propellers	 4 x MTU-16V 4000 M63L-2240 kW, 900-1800rpm, Total 8960 kW-12185 bhp 2x 2240 kW 575/690V 1 x 350 Kw 2x Tunnel 970 kW-CPP 1 x AZIMUTH 883 KW-FP 2 x Azipuli 120 CPP, 2200 kW, Ø3000 mm
Environmental Features	Ballast water treatment system, Exhaust Gas Cleaning by Selective Catalytic Reduction Converter with 95 % NOx reduction. Rolls Royce SaveCube for Energy Optimisation. LED lighting fitted where possible.
Deck Machinery Capstans Tugger Winches Mooring Winches-aft Anchor windlass Deck Crane STB Anchors Anchor Chain Garbage Incinerator	 2 x 10 t 2 x 15 t 2 x 10 t 0-16 m/min 2 x 21 t 0-38m/min 5t@13,5 m, 2t@24 m, foldable, manriding 2 x Stockless Ø52 mm Fitted
Navigation Equipment Navigation Control Joystick DP References Radar (ARPA) Sat. Navigator Navtex Wind Sensors Gyro Electronic Charts	 RR Unified Bridge Rolls Royce Rolls Royce ICON Rada Scan (1), CyScan (1), MRU (3), DGPS (2) Wind Sensor (2), HiPap 501 (follow Sub.) 1 x 10cm. 1 x 3 cm Fitted Fitted 3 3 TECDIS
Accommodation	Single Cabins: 17 2 bunk Cabins: 32 (64 bunks) 4 bunk Cabins: 4 (16 bunks) Gymnasium 1, Treatment Room 1, Dayroom/Lounges 3, Messroom/duty mess 2, Conference room 1, Offices 5 All cabins with separate WC/Shower, fully airconditioned. Local area Network CAT 7 in the entire accommodation.

GMTR120 - Innovative Design

The design has maintained the advantages of light construction, low centre of gravity and hoist loads whilst utilising a more efficient method of heave compensation, delivering greater sensitivity, resulting in improved core recovery and sample/data quality. In addition the design introduces a number of new safety features, including mechanical pipe handling and use of nitrogen as a compensator buffer gas.

Drilling Monitoring and Downhole Tools

The geotechnical drilling rig is fully instrumented for the electronic display of drilling parameters; torque, bit weight, mud pressure, mud flow rate and rotation speed. A comprehensive range of wireline downhole sampling and testing tools is available including PCPT (Piezocone Penetration Test), piston sampling, push sampling, wireline core barrel and percussion (hammer) sampling. All downhole tools (coring, sampling, dilatometers, p-s logging) are fully compatible within the 5.5" API drill string. A range of drag and specialised coring bits are provided. Large diameter drill pipe can also be used to allow large diameter cores to be taken.

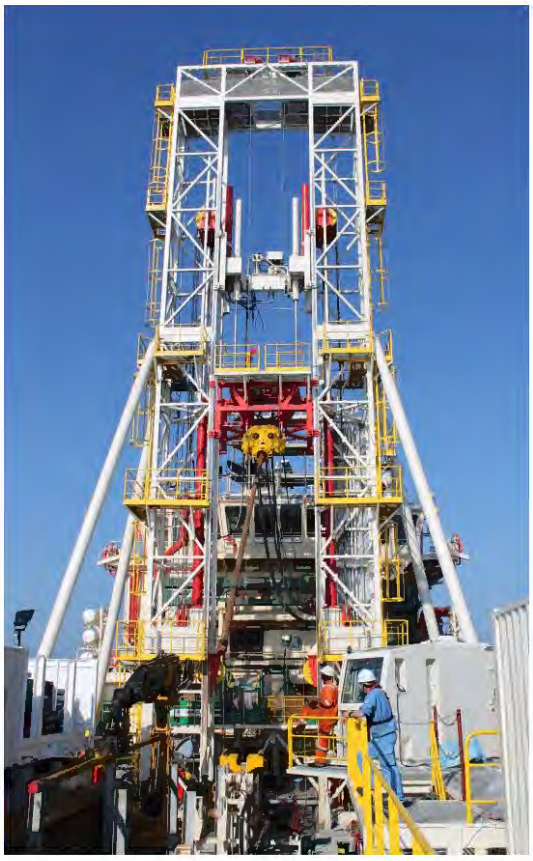

GMTR120	
Drilling System	Ram hoist system with twin wire suspension giving safe, efficient and compensated handling of the drill string and all in-hole tooling
Heave Compensation	6m stroke passive heave compensation (semi active under development) using nitrogen gas as compensation buffer with Olmsted valve slingshot protection. Seabed frame compensation 0.0 to 7.0m
Top Drive/Power Swivel	Top Drive / Power Swivel-Edeco swivel 19,400 N/M 0-120 rpm and 5,000 N/M 400 RPM breakout torque 22,500 N/M. Load capacity 120t capacity.
Seabed Frame	Up to 20t submerged, with hydraulic clamps
Pipe Handling	Single range two drill pipe handling using a proprietary mechanical handling system utilising pipe handling crane and pipe grabble; remote operated iron rough neck and spinner; proprietary catwalk system. Handles pipe with minimum manual intervention and hence improved safety
Hydraulic System	2x electro hydraulic power packs of 310kW each. Hydraulic distribution from a control module beneath the centralised control cabin
Mud System	Project-specific modular mud systems installed as required
Rig Winches	Seabed Frame: 3,500m, 36mm wire rope; SWL 32t / Head Line: SWL 3t, Tail Line: SWL 3t / Sampling: 3,000m, 10mm wire rope; SWL 1.5t
Drill Control Cabin	Proprietary designed control cabin for remote control via hydraulic/electric interface of all drilling and sampling operations. 3 man cabin for driller, assistant driller and PCPT operator giving coordinated control of all drilling/sampling operations. Rig specific DMS recording
Transport	Derrick sections and modular components designed to be transported within standard open-top shipping containers
Capability	Utilising a standard geotechnical drill string of BHA, drill collars and 5½" API drill pipe the 120t SWL gives a combined bore hole and water depth capacity up to 2,500m. Use of a aluminium drill string would increase this capability
Sampling *in situ* Testing	Can utilize 6⅝" API drill string to allow large diameter coring. Fitted with AP v. d. Berg downhole PCPT / push/piston sampling equipment and wireline coring equipment. Presently 1,200m PCPT umbilical and winch capacity – can be extended to 1,600 m
Soil Testing Laboratory	Installed on board as per project requirements
200kN Seabed CPT	As an option Geoquip's GMC201 20t seabed unit can be deployed through the vessel moonpool using the rig derrick and compensation system

TRUSTED OFFSHORE GEOTECHNICAL SOLUTIONS

Downhole Sampling Wireline Sampling Tools

Introduction

Geoquip Marine provide a suite of wireline downhole tools with their heave compensated drill rigs to recover high quality undisturbed samples and disturbed samples for description, classification and laboratory analysis.

Deployment

All wireline tools are deployed through the mud valve located in the rooster box of the drill rig and do not require the changing of ‘back ends’ prior to use when alternating with different sampling methods.

Piston and Push Sampling

Piston and push samplers are used to recover high quality undisturbed samples and are advanced hydraulically at a constant rate to minimise disturbance. The stroke of the wireline piston and push tools are 1.0m. The piston tool would only be used in very soft to soft cohesive layers where sample recovery can be difficult. The push sampler would be used in all other non-cemented cohesive and non-cohesive layers.

Percussion / Hammer Sampling

In layers where the push tool can not be advanced, such as weakly cemented material, gravel or where damage to the sample tube is likely then the sample tube is likely then the percussion/hammer sampler is used. This robust tool will recover samples in those layers in which the push and piston can not be used. A disturbed sample is recovered suitable for classification which is retained in the split spoon by a tulip catcher.

Advantages

The wireline deployment of all tools mobilised with Geoquip Marine's drill rigs allows the geotechnical engineers to alternate sampling and testing methods so that the most meaningful samples and data are recovered for a project without delaying the progress of the borehole.

Wireline Sampling Tools

	Piston Sampler	**Push Sampler**	**Percussion / Hammer Sampler**
Sample Diameter	72mm	63.5mm 70.5mm 72.0mm	65mm
Sample Tool Stroke Length	1.00m	1.00m	0.65m
Available Thrust	15t	15t	75kg free fall hammer
Sample Tube	Seamless stainless steel	Seamless stainless steel	Hardened steel with cutting shoe and tulip catcher
Ground Conditions for Use	Very soft to soft cohesive layers	All non-cemented cohesive and non-cohesive layers	Weakly cemented and gravel

TRUSTED OFFSHORE GEOTECHNICAL SOLUTIONS

Downhole Sampling Wireline Rock Coring

Introduction

The wireline rock coring tool is one of a range of downhole tools employed by Geoquip Marine that can be readily interchanged without having to pull the drill string. For example there is no need to pull rods when changing from rotary flush drilling in sands and clay layers to rotary coring in cemented sand and competent rock or vice versa.

Technical Features

There are two types of triple tube wire line core barrels available which are used to recover cores in different rock/cemented conditions. The first is the traditional design triple tube, plastic lined, wireline inner barrel. The second is an in-house developed triple tube, plastic lined wireline inner barrel that has a sprung loaded leading cutting shoe on the inner tube.

Advantage of the in-house Developed Triple Tube

The traditional core barrel is used to recover rock cores where ground conditions are competent rock and there is little variation in strength, fracturing and/or weathering. Where considerable variation in these three parameters does exist the sprung loaded inner tube barrel is much better suited due to its unique design. The inner tube cutting shoe will completely retract in material that is strongly cemented to allow the PCD (polycrystalline diamond) face discharge bit to cut the core in the same way a traditional core barrel would. In less cemented or non-cemented layers the inner shoe will spring forward to protect the sample in front of the bit from being washed away before entering the plastic liner.

Better Design - Better Recovery

The Geoquip Marine leading shoe core barrel therefore recovers the weaker/non-cemented material between the competent rock that would have been lost if the traditional core barrel had been used. This core barrel is therefore ideally suited for use in such areas as the Middle East where highly variable calcarenite layers are common between clays and non-cemented sands.

Wireline Rock Coring		
	Traditional Core Barrel	**GMUK's Leading Shoe Core Barrel**
Core Diameter	80mm	70mm
Core Length	1.5m	1.5m
Ground Conditions for Use	Consistent competent rock	Highly variable layers e.g. calcarenite, interbedded non-cemented sand and rock

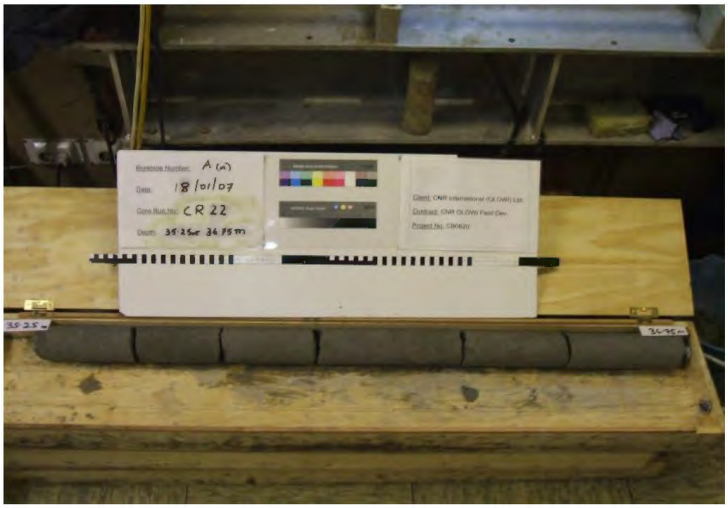

TRUSTED OFFSHORE GEOTECHNICAL SOLUTIONS

In Situ Piezocone Penetration Test Tool

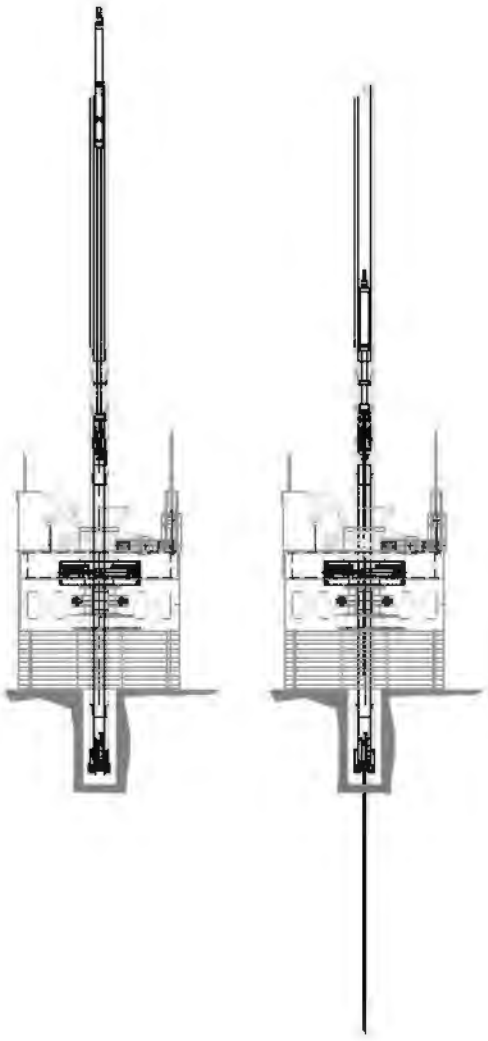

Introduction

Geoquip Marine provides offshore drill rigs with the capability to conduct Piezocone Penetration Testing (PCPT) using the AP van den Berg PCPT system (WISON-APB).

Data Acquisition

Parameters recorded by the cone and displayed in real-time on the acquisition computer include tip resistance, sleeve resistance and pore water pressure.

Technical Features

Tests with this PCPT equipment can be conducted with a 1.5m or 3.0m stroke length utilising a 10cm^2 or 5cm^2 cone. The wireline PCPT tool is designed to be operated within the rig's API drill string with the cone advanced into the soil ahead of the drill bit using the WISON internal hydraulic cylinder.
The cone is advanced at the industry standard constant rate of 2cm/s.
On completion of each test the PCPT tool is reset on deck by pumping the stroked length back into the tool's body with high pressure water.

Operation

The stroke length during a test is measured by a calibrated flow cylinder integrated within the power pack. Two electronic baseline checks are performed on all three channels for each test.
The first is recorded with the tool at the bottom of the borehole prior to starting the test. The second baseline is taken upon completion of the test prior to retrieving the tool from the borehole. The first baseline is used to zero the sensors for recording the test data. The second baseline serves as a quality control check to monitor the integrity of each sensor. Additional baselines are recorded before and after each test with the tool on deck.

Wireline Sampling Tools		
	1.5m WISON-APB PCPT	**3.0m WISON-APB PCPT**
Maximum Test Stroke Length	1.5m	3.0m
Penetration Rate	2cm/s	2cm/s
Derived Parameters	Net cone resistance MPa Friction ratio % Pore water pressure ratio %	Net cone resistance MPa Friction ratio % Pore water pressure ratio %
Ground Conditions for Use	Dense to very dense non-cohesive layers	All cohesive layers and up to very dense non-cohesive layers

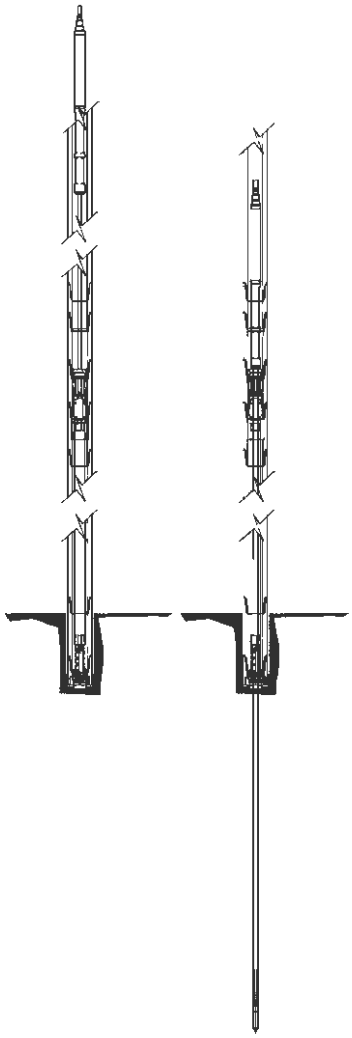

TRUSTED OFFSHORE GEOTECHNICAL SOLUTIONS

Geotechnical Tools PCPT Cones

Introduction

The cones Geoquip Marine use with their CPT tools are of industry standard 5cm^2 or 10cm^2 effective areas and have a maximum tip resistance of 100MPa. CPT measurements are crucial for offshore engineering purposes and are required by most of our clients. Our crew is experienced in handling all the necessary instrumentation to ensure highest quality data is obtained.

Range of Use and Method of Employment

Typically Geoquip Marine uses these electronic cones in geotechnical site investigations conducted by their heave compensated drill rigs where the reaction for each test is provided by the seabed frame (SBF).

Pore Water Pressure	
Bridge Feeding	1.277mA
Sensitivity	15.6617mV/mA
Bridge Feeding	3.929V
Sensitivity	5.0910mV/V
Inaccuracy less than	40kPa
Nominal Pore Pressure	4,000kPa
Maximum Pore Pressure	6,000kPa
Output at Nominal Tip Resistance	20mV

Data Transfer

The cones data signals are transferred through the CPT's umbilical (from which the cone is powered) and displayed in real time on the acquisition computer.

Additional Measurements

A pore water pressure sensor on the cones positioned between the cone tip and sleeve provide an additional parameter for Geoquip Marine's geotechnical engineers to utilise when classifying soil types from the tests.

Tool Specifics

Typical load range, accuracies and sensitivities of the three cone sensors are detailed in the tables.

PCPT Cones		
	Tip Resistance	**Tip and Local Friction**
Bridge Feeding	12.563mA	12.563mA
Sensitivity	1.1191mV/V	1.1320mV/V
Inaccuracy less than	0.1MPa	0.1MPa
Nominal Tip Resistance	50MPa	50MPa
Maximum Up Resistance	100MPa	100MPa
Output at Nominal Tip Resistance	5mV	5mV
Effective Area	$5cm^2/10cm^2/15cm^2$	$5cm^2/10cm^2/15cm^2$

PCPT Accuracy classes

Geoquip normally adopt Class 1 PCPT cones although depending on ground conditions Class 2 may be used subject to agreement.

Accuracy class	Measured parameter	Allowable minimum accuracy	Max. length between measurements
1	Cone resistance Sleeve friction Pore pressure Inclination Penetration depth	50 kPa or 3% 10 kPa or 10% 5 kPa or 2% 2° 0.1 m or 1%	20mm
2	Cone resistance Sleeve friction Pore pressure Inclination Penetration depth	200 kPa or 3% 25 kPa or 15% 25 kPa or 3% 2° 0.2 m or 2%	20mm

TRUSTED OFFSHORE GEOTECHNICAL SOLUTIONS

IN SITU TESTING SEISMIC PIEZOCONE

Introduction

Geoquip Marine provide a Seismic Piezocone Penetration Testing (S-PCPT) system for use in conjunction with offshore drilling spreads. The system comprises a seismic shear wave generation source, seismic cones with built in geophones and a seismic recorder. The seismic source is fitted to the drilling seabed frame and deployed at the start of each borehole. The seismic cones are compatible with Geoquip Marine's Wison-APB Piezocone Penetration Testing (PCPT) tool which Geoquip Marine have been operating for several years from their various drilling vessels.

Innovative Design

Downhole *in situ* seismic measurement enables this data to be acquired more economically offshore than by using a cross borehole method. Traditional PCPT data is also acquired by the system more details of which can be found in Geoquip Marine's Wison-APB PCPT tool information sheet. The main specifications of the S PCPT system.

Key Features:

- 3m test stroke length
- 2cm/s penetration rate during testing
- 2-6 shear waves generated per 3.0m test
- 70dB shear wave source
- 4 hydrophones (in 2 pairs in X and Y orientation with 1m separation)

Data Acquisition

The data acquisition system records the time taken for a shear wave to reach the geophones at different penetration intervals through the depth of a borehole. Seismic data acquired by the system can be used for the assessment of the shear moduli for small strains. This parameter is often required for earthquake analyses, foundation evaluation with regard to vibration and the assessment of wave loading on structures.

TRUSTED OFFSHORE GEOTECHNICAL SOLUTIONS

Offshore Laboratory Testing

Introduction

The Geoquip Marine containerised laboratories allows technicians and geotechnical engineers to determine soil classification and strength parameters for use in engineering and pile design, pipeline route assessments and dredging applications offshore during fieldwork operations.

Data Transfer

The latest updates on drilling progress, data from downhole measurements and the results of laboratory testing can be sent to our clients shortly after they have been acquired. This allows our customers to monitor progress and to receive relevant information as soon as possible.

Data Acquisition

The system provides a continuous profile of tip resistance, sleeve friction and pore water pressure, which can be used for the derivation of shear strength in cohesive soils and the relative density of non-cohesive soils. The system has the ability to operate a range of cone sizes and optionally seismic CPT cones, T-bar and ball PCPT equipment.

FUGRO
FUGRO SYNERGY

Fugro Synergy represents a new generation high technology drillship built in response to an increasing demand for cost effective drilling solutions.

The Fugro Synergy is a new build vessel that has been specifically designed to deliver Drilling and Sub Sea well services to the Global Oil and Gas industry. With an impressive technical specification, the Synergy is capable of removing many MODU based activities off the critical path. Fugro is focused on developing niche subsurface markets in the shallow section from mudline down to approximately 3,000m, dependent on water depth.

CAPABILITIES

Utilizing our core drilling knowledge and experience, we can install and construct the shallow section of subsea wells and seafloor infrastructure. The main development areas that will add maximum value to a Client project include:

- Subsea and Well Activity
- Conductor / Casing Installation
- Well De-risking
- Pre-Drill Activities
- Well Abandonment

Lifting pipe on the drill deck.

FUGRO SYNERGY

Technical Specifications

General

Vessel Name	Fugro Synergy
Builder / Year	Bergen Group Halsnoy AS / 2009
Owner / Operator	Fugro Synergy, Inc. / Fugro Drilling & Well Services
Flag	Bahamian
Speed	Transit 12 knots (Economic Cruise)
Call Sign	C6XR3 (Charlie Six X-ray Romeo Three)
Classification	+1A1 R ICE-C Ship-shaped Drilling Unit SF, COMF-V(3) HELDK-SH E0 DYNPOS-AUTR CLEAN, DRILL DK (+)
Port of registry	Nassau
Endurance	45 days cruising
Operational water depth	25 m to 3000 m

Dimensions

Length over all (L.O.A.)	103.7 m
Beam (mid)	19.7 m
Free board	8.7 m
Draft	6.3 m (6.5 m Summer)
Displacement	9287 tons (deadweight 3775 tons)
NRT	1963 tons
GRT	6543 tons
Helideck	D= 21 m; suitable for Sikorsky S92 helicopter
Moonpool	7.2 m x 7.2 m

Accommodations / Rooms

Cabins	24 x single, 28 x double, 1 x 4 man cabins
Day room	1 Non-Smoking – 1 Smoking
Fitness room	Yes
Conference room	Yes
Client office	1
Hospital	1 x 1 bed

Machinery

Main engine	(5) Caterpillar type 3516C - 2,188 kW @1,800 rpm
Main engine generators	(5) Siemens - 2,188 kW @1,800 rpm
Electrical system	690/450/230V-60 Hz
Propulsion	(2) Ulstein-Aquamaster Azimuth Thruster type AZP100/M-280 - 2,200 kW @1,200 rm
Side thruster	(2) Kamewa Ulstein TT2200 SS DPN CP Tunnel Thruster - 1,050 kW @1,190 rpm
Azimuth thruster	(1) Ulstein-Aquamaster Azimuth Thruster type UL 1201 - 883 kW @1,800 rpm
Emergency generator	(1) 219 kVA 690 V 60 Hz @ 1,800 rpm
Emergency generator engine	(1) Volvo Penta 339 kW @ 1,800 rpm

Capacity

Fuel capacity	1,357 m^3
Fuel consumption	DP 12 m^3/day; Transit 28 m^3/day
Water capacity	Potable 805 m^3; Ballast 2,873 m^3; Drill 1737 m^3
Water making	1 x 40 m^3/day

Communications

V-sat	Voice + Data access (multiple bands)

Safety

Lifeboats (TEMPSC)	2 x Schat-Harding KISS 1000 - 90 person
Fast rescue boat	1 x Mare Safety GRP700 230 hp
Liferafts	2 x Viking & 4 x DSB (35 men each)
Survival Suits	113
Life jackets	114 + 8 Children Sized

Deck Machinery

Deck Cranes	5–ton Knuckle-boom Provisions crane
Aft Deck Crane	25–ton AHC Knuckle-boom Offshore Crane

Positioning / Navigation

Echosounder	1 x Furuno FE-700
S-band radar (ARPA)	1 x Furuno FAR-2837-S
X-band radar	1 x Furuno FAR-2827, 1 x Furuno FAR-2117
Gyro compass	(3) Simrad GC-80
Automatic pilot	Simrad AP 50
Doppler log	Furuno DS-80
Anemometer	Gill OMC-139
GPS	(2) DGPS Furuno GP-150
ECDIS	2 x TRANSAS 4000 (Main & Backup)
Transporter (SART)	2 x Tron SART-20 plus 2 in lifeboats

Drilling System / Seabed Frame System

Drilling Derrick	Fugro SeaCore R-190
Drilling Rig	SeaCore R-190
Max Load	150 tonnes, SWL Below Top Drive
Heave Compensation	BoschRexroth stroke 7m, Passive
Top Drive	National Oilwell Varco TDS 250
Drill Pipe Length	Drill Pipe API Range 2 (trips Doubles)
Pipe Handling	Aker PDPH Pipe Handler
Rotary Slips	Hydraulic Power Slips
Mud Pumps	(3) Wirth TPK800; each 949 l/min @340 bar to 2,762 l/min @ 115 bar
Mud Mixing Pumps	(2) Baker SPF MUD HOG 2.5, each 227 m3/h @ 4 bar
Mud Tanks	(2) 85.9 m^3 + (1) 65.9 m^3 + (1) 44.9 m^3 + (1) 23.8m^3
Bulk Cement Tanks	2 x 75 m^3
Barite/Gel Dry	4 x 75 m^3
Heavy Load Winch	2 x 32 tonne, 60 m/min (3,000 m WD)
Seabed Frame	15 tonnes Air weight, 4.5 m wire separation

Geotechnical Systems / Laboratory

Downhole	WISON®
Seabed	SEADEVIL, SEACALF®
Onboard Laboratory	Permanent, 259 m^2
Sample Storage	2.4 m x 3 m refrigerated container

Control and Navigation

DP System	DP2 - Kongsberg K-POS
Reference systems	2 x DGPS, 2 x Starpack, 1 x Taut Wire, 2 x HPR
Wind indicators	3 Indicator (OMC-139D)
Vertical reference system	2 x Seatex MRU

© FUGRO 03 2017 / FCST

ask@fugro.com
www.fugro.com

FUGRO
FUGRO VOYAGER

The Fugro Voyager is a new build vessel, part of a series of Fugro custom designed and constructed DP2 geotechnical drilling vessels.

GEOTECHNICAL DRILLING VESSEL

The Fugro Voyager is a fit for purpose designed and constructed geotechnical drilling vessel that provides a stable platform capable of operating independently in remote regions around the world.
The design of the Fugro Voyager allows integrated investigation methods to be deployed during one survey program.

The Fugro Voyager is designed and constructed in compliance with the Code of Safety for Special Purpose Ships (2008).
It has been specifi cally designed for operating in water depths up to 3000 meters for both drilling and seabed sampling and in situ testing.

The twin tower type drilling derrick is installed over a centrally located moonpool, drilling is performed with a heave motion compensated ram type drilling system.

The drilling machinery and equipment, rig pumps, drilling fluid bulk storage and mixing equipment, and ancillary equipment is installed below deck providing a clear, uncluttered main deck / drill floor area that when combined with automated pipe and tool handling equipment promotes safe drill floor operations.

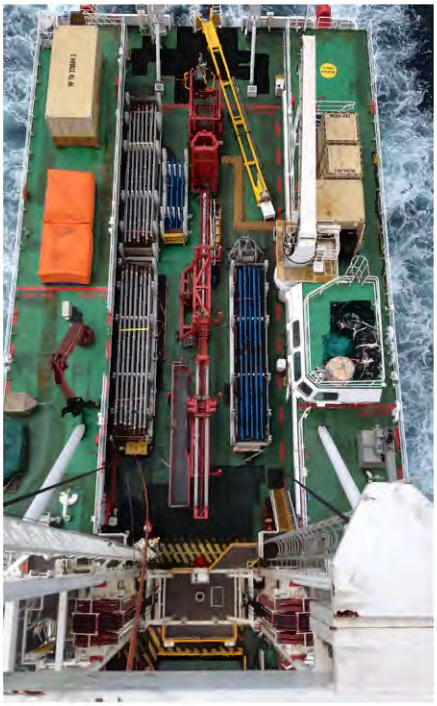

Plan View of Drill Floor.

FUGRO VOYAGER

Technical Specifications

General

Vessel name	Fugro Voyager
Builder/Year	Tebma Shipyard/2013
Owner/Operator	ICON Voyager Pte. Ltd./Fugro Singapore
Flag	Singapore
Speed	Transit 10 – 12 knots
Call sign	9V3888
Classification	DNV+1A1, -E0-SF, SPS, Dynops AUTR, CLEAN, COMF-V(3), NAUT-OSV(T), DK(+), h1(1.2)
Port of registry	Singapore
Endurance	Max 35 days
Operational water depth	25 m to 3000 m

Dimensions

Length over all (L.O.A.)	82.9 m
Beam (mid)	19.8 m
Free board	2.5 m
Draft	5.65 m
Displacement	6,600 tons
NRT	1,394 tons
GRT	4,644 tons
Derrick height above keel	42 m
Moonpool	3.1 m x 3.1 m

Accomodation / Rooms

Cabins	14 x Single cabin, 23 x Double cabin
Day room	1
Fitness room	Yes
Conference room	16-18 persons
Client office	1
Hospital	Yes

Machinery

Main Engine	4 x MAN 9L21/31 @ 1980kW each
Main Engine Generators	4 x Hyundai HFJ7 @ 2351 kVA each
Power Management	ConverTeam 690V Distribution
Propulsion	2 x Berg CPP, 233 rpm; 2300 kW each with Becker rudders
Bow Tunnel Thruster	2 x Schottel 800 kW
Stern Tunnel Thruster	2 x Schottel 590 kW
Emergency Generator	1 x 300 kW

Capacity

Fuel capacity	800 m^3
Fuel consumption	DP 12-15 m^3, Transit 14-24 m^3
Water capacity	Fresh 327 m^3/Drill 753 m^3
Water making	50 m^3/day

Communications

V-sat	K/Cu Band; Internet & Communications Singtel, Voice Fleet Broadband 77, Voice & Data (Fax)

Safety

Hospital	1 x 2 beds
Lifeboats	N/A
Life rafts	4 x 35 men RFD, 2 x 25 men RFD
MOB boat	1 x 6 men NOREQ 25 hp
EPIRB	1 x Jotron, 1 x Sailor
Other aids	140 x Life jackets, 74 x Immersion Suits, 11 x Life buoys

Deck Machinery

Deck Crane 1	1 x SWL 5 tons Mcgregor
Deck Crane 2	1 x SWL 3 tons Plimsoll
A-Frame	Stern Mounted 15T SWL

Positioning/Navigation

Echosounder	1 x Skipper GDS 102, 50 & 200 Khz
S-band radar (ARPA)	1 x Sperry, Vison Master FT CATI 34
X-band radar	1 x Sperry, Vison Master FT CATI 34
Gyro compass	3 x Teledyne
Automatic pilot	1 x Sperry /Navipilot 4000
Doppler log	1 x Sperry /Naviknot
GPS	2 x SAAB R4 Navigation
ECDIS	TRANSAS 4000
Transporter (SART)	2 x Sailor, 9 Ghz

Drilling System/Seabed Frame Systems

Drilling Derrick	Twin Mast, 100T SWL
Drilling Rig	R100 Heave Compensated Ram Rig
Max Load	70T Compensated (80T Ratchet Mode)
Heave Compensation	Passive with Hard Tie Option, 6 m Stroke length
Top Drive	Seacore T1.0-A100
Drill Pipe Length	2500 m
Pipe Handling	Knuckle Boom Pipe Handler
Iron Roughneck	Aker Hydraulic
Automatic Tool Handler	Fugro design
Rotary Slips	Calvins FFH 100-S, Hydraulic
Mud Pumps	2 x Gardner Denver THE Triplex
Mud Mixing Pumps	2 x 50HP
Mud Tanks	2 x 30 m^3, 1 x 28 m^3
Bentonite Dry/Liquid	3 x 50 m^3/2 x 80 m^3
Barite Dry	1 x 50 m^3
Heavy Load Winch	Traction Winch 35T @ 9m/min, 10T @ 30m/min 2 x 3200 m of 32 mm wire rope
Seabed Frame	3 m x 3 m x 4 m

Geotechnical Systems/Laboratory

Downhole	Wison MK IV and EP systems
Seabed	Wheeldrive SEACALF, Box Corer, Piston Corer
Seismic/Vane/Coring	Optional upon request
Onboard Laboratory	Permanent 7 m x 5 m
Sample Storage	1 x 20 ft Reefer Container

Control and Navigation

DP System	Converteam DPS 21 Duplex DP, WS x 2, DP IJS x 1, DP Portable Joystick x 1
Reference systems	1 x HiPAP Sonardyne USBL, 2 x DGPS, Fugro SeaStar 9205, 1 x ATW Series LTW
Wind Indicators	2 x Ultrasonic Gill Wind Observer, 1 x Young 09106
Vertical reference system	3x DMS 05

© FUGRO 06 2016 / FCST

fsin.tender@fugro.com
WWW.FUGRO.COM

HORIZON GEOSCIENCES

HORIZON GEOBAY

VESSEL FEATURES

- DP-2
- Multipurpose site investigation vessel
- Kongsberg SDP 21 – HiPAP
- Helideck, Super Puma
- 30 t seabed crane with constant tension (1,500 m)
- Conference room, offices, online/offline rooms
- Accommodation for 66 people
- Dayrooms, mess and gym
- 469 m² deck area

The following equipment is available subject to project requirements:

GEOTECHNICAL EQUIPMENT

- Fully Heave Compensated Drill Rig
- Wison-APB Sampling, PCPT and Down-hole Vane Testing Equipment
- Containerized mud mix & transfer system
- Fully equipped offshore soil testing Laboratory
- 200 kN seabed CPT system
- ROSON 40 kN CPT system
- Vibro / Drop / Gravity Coring

GEOPHYSICAL EQUIPMENT

- Analogue geophysical
- 2D HR Digital geophysical (optional)
- Multi Beam Echosounder
- Single Beam Echosounder
- Magnetometer / Gradiometer for UXO Surveys

ROV EQUIPMENT

- Horizon Shark G2 inspection class ROV

POSITIONING SYSTEM

- CNAV & Veripos (Primary & Secondary)

PRINCIPAL PARTICULARS

- Flag: Panama
- Call Sign: 3ETG2
- IMO Number: 7801556
- Classification Society: American Bureau of Shipping (ABS)
- Class Notations: A1, AMS, ACCU, DPS-2
- Rebuilt: 1999

DIMENSIONS

- LOA: 87.0 m
- Beam: 15.6 m
- Draught: 6.91 m
- Gross tonnage: 3,502 t
- Net tonnage: 1,051 t

GENERATORS

- (4) Stamford LVSM 814 C2
- Output: Total 6,000 kW (440V 60 Hz)

AUXILLIARY ENGINES

- (2) YANMAR 6GL-HT 720
- 750 kW each

THRUSTERS / PROPULSION

- Stern thrusters / Propulsion (2) 1,400 kW CRP Aquamaster (azimuth)
- Bow thrusters: (2) 925 kW CP Kamewa (tunnel) (1) 830 kW Ulstein CP (azimuth)

HORIZON GEOSCIENCES

DECK EQUIPMENT

- 1 capstan
- 1 anchor winch
- 1 Hydralift crane (30 t / 10 m; 10 t / 20 m) wire length 1,500 m)
- Moon pool (4.8 m x 4.53 m)
- Power supply on deck (for trencher, etc.): 2,000 amp (440 v / 60 Hz)

ACCOMMODATION

- 66 persons
- 26 single cabins / 20 doubles

MAIN ENGINES

- (2) Caterpillar 3516B
- (2) Mitsubishi S12R-MPTK

NAVIGATION & INSTRUMENTATION

- 2 JRC ARPA Radars
- 1 Navigation Echo Sounder
- 1 MARIS ECDIE900
- 1 Trimble DGPS
- 1 Ashtech DGPS/GLONASS
- 1 Simrad Autopilot AP 9 Mk III
- 1 Anschutz 20 digital gyroscope
- 1 Sperry Marine NAVIGAT 2100 fiber optic gyrocompass
- BNWAS

COMMUNICATIONS

- System in accordance with SOLAS requirements for GMDSS-A3
- 1 Nera Mini-M (Voice/Fax)
- 1 Schlumberger Rignet (V-Sat /
- KU-band) (optional)
- 2 GSM mobile telephones
- FBB (Fleet Broad Band)

DYNAMIC POSITIONING SYSTEM (DP)

- 1 Kongsberg SDP 21 dual-redundant DP
- 2 Kongsberg HiPAP (dual mode)

HELICOPTER DECK

- 19.5 m x 19.5 m (Super Puma)

LIFE-SAVING EQUIPMENT

- 8 life rafts, capacity each: 25 persons
- 1 Norsafe Magnum (7,7 m) FRC
- 1 Vestdavit PL 3250

Note: This specification is subject to change without notice.

Dina Polaris

Introduction

The Dina Polaris is a 2017 build, DP2 vessel, specially designed for offshore installation services in harsh weather conditions. Certificated Clean Design she was designed and built to minimise her working footprint on the environment. Geoquip's twin derrick fully heave compensated GMTR120 drilling rig is installed over the 7.2m x 7.2m midship moon pool. At 98.9m length and 21.0m beam she is one of the largest geotechnical vessels currently available in the industry, creating an extremely stable platform, allowing seabed PCPT equipment and ROV to be mobilised alongside the GMTR120.

Positioning

The vessel uses a Rolls Royce ICON dynamic positioning (DP) system for station keeping. The system consists of a dual DP controller unit and operator stations. The DP system provides a direct interface to the azimuth propellers, and bow thrusters, and includes the necessary interfaces to power plants, position-reference systems and sensors. This provides accurate and precise station-keeping during all borehole and seabed testing

Key Features:

- Class 2 Dynamic Positioning
- Iron roughneck and remote tool handling
- Clean design vessel minimising carbon footprint
- Heave compensated offshore geotechnical deep water drilling rig
- Combined water and borehole depth of 2,500m
- Comprehensive on board soil and rock testing laboratory
- Built in hangars for WROV, port and starboard

Drilling Monitoring and Downhole Tools

The GMTR120 drill rig is fully instrumented for the electronic display of drilling parameters; torque, bit weight, mud pressure, mud flow rate and rotation speed. A comprehensive range of wireline downhole sampling and testing tools is available including PCPT (Piezocone Penetration Test), piston sampling, push sampling, wireline core barrel and percussion (hammer) sampling. All downhole tools (coring, sampling, PS logging) are fully compatible within the 5½" API drill string. A range of drag and specialised coring bits are provided. Large diameter drill pipe can also be used to allow large diameter cores to be taken.

Drilling Rig GMTR120	
Power Swivel	Top Drive / Power Swivel-Edeco swivel 19,400N.m^{-1}. 0rpm to 120rpm and 5,000N.m^{-1} 400rpm breakout torque 22,500N.m^{-1}. Load capacity 120t.
Drill String	5½" or 6⅝" API drill string Iron roughneck and pipe handling systems installed
Seabed Frame	Up to 20t submerged, with hydraulic clamps
Heave Compensation	6m stroke passive heave compensation (semi active under development) using nitrogen gas as compensation buffer with Olmsted valve slingshot protection. Seabed frame compensation 0m to 7m
Mud	Project-specific modular mud systems installed as required
Downhole Sampling	Wireline piston / push sampler, percussion / hammer sampler Remote tool handling system
Downhole *in situ* Testing Tools	WISON-APB PCPT cone penetration testing with pore water pressure and seismic velocity measurements PS wireline logging
Downhole Coring	Traditional and leading shoe core barrel
Drill Control Cabin	Control cabin for remote control via hydraulic / electric interface of all drilling and sampling operations. Allows driller, assistant driller and PCPT operator coordinated control of all drilling / sampling operations. Rig specific DMS recording
Drill Rig Workshop	ISO 20ft container sized fully equipped workshop, tools and equipment. 220v supply
Equipment Winches	Braden draw-works winch, seabed frame umbilical winch, 2 x piston sample winch (electro mechanical), 2 x headline tugger winch, tail line tugger winch.
Seabed CPT Unit	20t deep push seabed CPT system. Straight rod push thrust mechanism allows recording of *in situ* data to 40m below mudline, or greater, depending on soil conditions.

Dina Polaris	
Flag, IMO, Call Sign	Norway, IMO 976031, Call Sign: LAXB7
Class	DnV + 1A1, SF, E0, OFFSHORE SERVICE VESSEL, DK(+), HL(2,8), CLEAN DESIGN, NAUT OSV(A), RECYCLABLE, BWM-T, ECA(SOx-A), LFL(*), COMF V(3)C(3), DYNPOS AUTR, SPS, ICE 1A, WINTERISATION BASIC
Built	2017
Tonnage	GRT 6,966 NRT 2,089
Principal Dimensions LOA Breadth (moulded) Draft (max)	 98.9m 21.0m 7.1m
Tank Capacity Fuel Oil Fresh Water	 3,000m^3 1,060m^3
Speed / Consumption Standby On DP Economic (transit)	 3m^3/24h 6m^3/24h 11m^3/24h at 12 knots
Endurance	>28days
Machinery Main Engines Generators Harbour Generator Bow Thrusters Azimuth Propellers	 4 x MTU-16v 4000 M63L-2240kW, 900rpm to 1800rpm, Total 8960kW-12185bhp 4 x 2240kW 575v/690v 1 x 350kW 2 x Tunnel 97 kW-CPP 1 x Azimuth 883kW-FP 2 x Azipuli 120 CPP 2,200kW, Ø3,000mm
DP System	Rolls-Royce Icon
Moon Pool Main Deck	 7.2m x 7.2m
Cargo Deck	1,000m^2
Accommodation	17 x Single berth cabins 32 x Double berth cabins 4 x Four man cabins 2 x Messroom/duty mess 1 x Conference room 5 x Offices 1 x Gymnasium 1 x Hospital All cabins with separate WC / shower, fully airconditioned. Local area Network CAT 7 in the entire accommodation.

Geoquip Saentis

Introduction

The Geoquip Saentis is a 2005 build, DP2 MPSV vessel, designed for offshore support and ROV services in harsh weather conditions. The Geoquip Saentis comes with good spacious accommodation and workspace. Geoquip's fully heave compensated GMR600 drilling rig has been installed over the 4.0m x 4.0m midship moonpool. At over 80m length and 18m beam she provides a stable platform for offshore geotechnical operations allowing seabed PCPT equipment and ROV to be mobilised alongside the GMR600.

Positioning

DP2 System Installed: Kongsberg Simrad SDP21, Reference Systems (2 x DGPS, taut wire) and Sonardyne (Ranger 2) HPR system for subsea positioning.

Key Features:

- Class 2 Dynamic Positioning
- Remote tool handling and pipe handler
- Heave compensated offshore geotechnical drilling rig
- Combined water and borehole depth of 600m
- Comprehensive on board soil and rock testing laboratory

Drilling Monitoring and Downhole Tools

The GMR600 drill rig operates with standard safety features, including remote tool handler, mechanical pipe handling and use of nitrogen as a compensator buffer gas. A range of wireline downhole sampling and testing tools is available including PCPT (Piezocone Penetration Test), piston sampling, push sampling, wireline core barrel and percussion (hammer) sampling. All downhole tools (coring, sampling, PS logging, etc.) are fully compatible with the 5½" API drill string. A range of drag and specialised coring bits are provided. Large diameter drill pipe can also be used to allow large diameter cores to be taken.

Drilling Rig GMR600	
Power Swivel	Dando 1000 twin motor with dual speed setting for high torque / high rotation • Max torque: 9600 Nm • Max speed: 280 RPM • Max dynamic load: 40t Max static load: 50t
Drill String	5½" or 6⅝" API drill string
Seabed Frame	12t, with hydraulic clamps and compensation up to 4.0m
Heave Compensation	Effective drill string compensation 0m to 4m. Seabed frame and seabed CPT unit heave compensation with an effective stroke from 0m to 4m
Mud	4,000l mix tank, 8,000l storage tank guar gum seawater miscible
Downhole Sampling	Wireline piston / push sampler, percussion / hammer sampler
Downhole *in situ* Testing Tools	WISON-APB PCPT cone penetration testing with pore water pressure and seismic velocity measurements PS wireline logging
Downhole Coring	Traditional and leading shoe core barrel
Drill Control Cabin	Control cabin for remote control via hydraulic / electric interface of all drilling and sampling operations. Allows driller, assistant driller and PCPT operator coordinated control of all drilling / sampling operations. Rig specific DMS recording
Drill Rig Workshop	ISO 20ft container sized fully equipped workshop, tools and equipment. 220v supply
Equipment Winches	Braden draw-works winch, seabed frame umbilical winch, 2 x piston sample winch (electro mechanical), 2 x headline tugger winch, tail line tugger winch.
Seabed CPT Unit	20t deep push seabed CPT system. Straight rod push thrust mechanism allows recording of *in situ* data to 40m below mudline, or greater, depending on soil conditions.

Geoquip Saentis	
Flag, IMO, Call Sign	Bahamas, IMO 9282132, Call Sign: C6UMB8
Class	DNV GL 1A1 Supply Vessel DYNPOS(AUTR) E0 SF TMON
Built	2005, converted 2019
Tonnage	GRT 3,404 NRT 1,131
Principal Dimensions LOA Breadth Draft (max.)	 80.5m 18.0m 6.1m
Tank Capacity Fuel Oil Fresh Water	 1,000m^3 933m^3
Speed / Consumption Standby On DP Economic (transit)	 3m^3/24h 10m^3/24h 8m^3/24h at 7 knots
Endurance	>28days
Machinery Main Engine Shaft Generators Other Generators Bow Thrusters Stern Thrusters Propellers Fuel Type	 2 x MAK 8L26 marine diesel engines each developing 3,217bhp @ 750rpm each driving 1,600kW shaft alternator and CP propeller. Total developed power 4,800kW 2 x 1,600kW 2 x 350kW and 1 x 190kW 2 x 610kW 2 x 610kW 2 x CPPs MGO
DP System	Kongsberg K-POS DP 21
Moon Pool Main Deck	 4.0m x 3.8m
Cargo Deck	600m^2
Accommodation	11 x Single berth cabins 23 x Double berth cabins (en-suite) 3 x Offices 1 x Messroom / duty mess 1 x Conference room 1 x Dayroom / lounge 1 x Recreation room 1 x Hospital Dedicated survey area Fully air-conditioned.

FUGRO
ARAN 120

The Aran 120 is a medium sized, high payload, container transportable, modular jack-up platform. The jack-up has low international transport costs coupled with high performance capabilities.

The jack-up's modular design allows the Aran 120 to provide a cost-effective solution to perform a wide variety of functions from geotechnical investigations to excavation
and construction.

With a large deck area of 324 m^2 the Aran 120 can cater for a wide application of drilling and specialist in situ sampling & testing.

The Aran 120 has a rapid deck elevating system and is equipped with four legs mounted externally to provide maximum strength and stability.

Assembly and commissioning of the jack-up superstructure is achieved in 2-3 days, allowing a rapid mobilisation of the required plant, equipment and ancillaries.

The jack-up can be fitted with one of Fugro's hydraulic thrusters to provide self-propulsion and to aid in the final positioning of the jack-up.

In a compact configuration, this fast elevating jack-up is ideal for confined intertidal areas, where swift, accurate moving and positioning is required.

In a larger configuration, the Aran 120 jack-up platform is capable of working safely and productively in exposed open waters and high tidal ranges.

For maximum safety, the jack-up is equipped with rigid steel bulwarks and 110 V fluorescent lights, providing full inboard and outboard illumination for the continuation of safe working conditions over a 24 hour working period.

Operated and maintained exclusively by Fugro's trained and experienced marine crew, the Aran 120 jack-up is a versatile, stable, self-elevating platform which provides a cost-effective solution for overwater work.

SPECIFICATIONS

Aran 120 Jack Up Barge

Classification society:	Germanischer Lloyd
Max. separation:	32 m (subject to environmental conditions at location)
Draught:	1.52 m
Max. payload:	120 t (dependent on spud length)
Max. deck load:	15 t / m²
Jacking system:	Twin hydraulic ram and locking ring
Length:	18.3 m
Beam:	18.3 m
Number of legs:	4
Max. leg length:	35 m
Leg dia.:	0.76 m

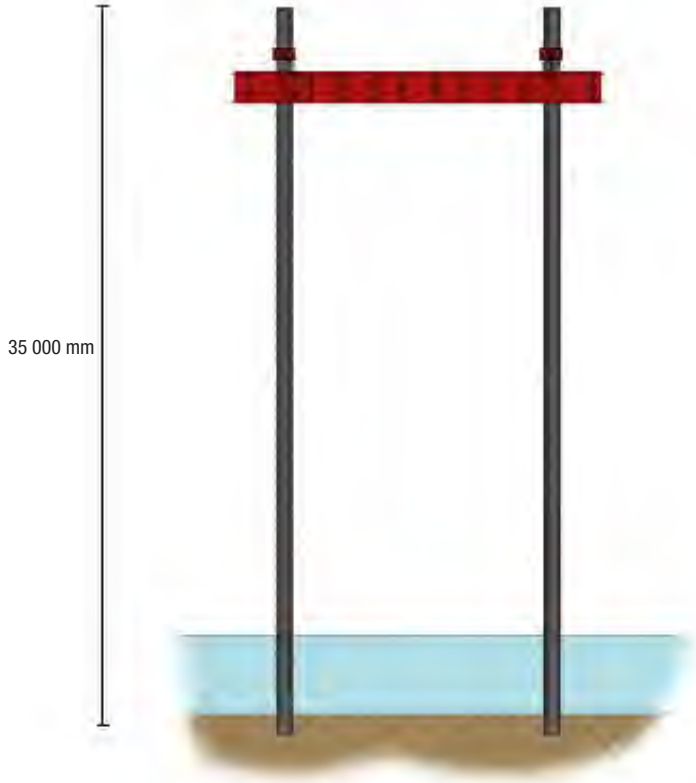

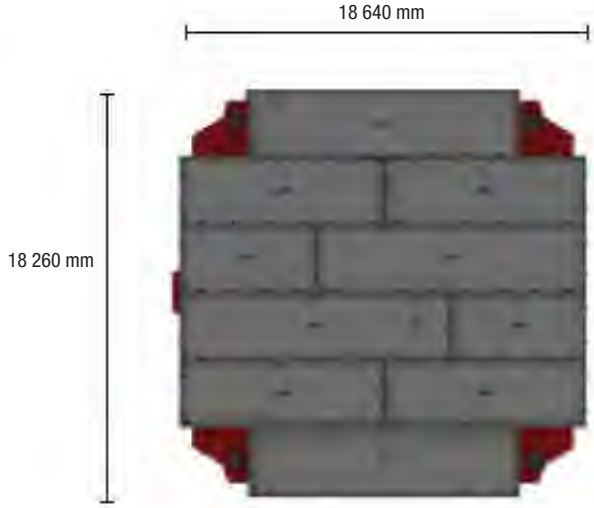

© FUGRO 09/2016/FGSL-FAL/AR120

geoservices.uk@fugro.com

WWW.FUGRO.COM

FUGRO
ARAN 250

The Aran 250 is a medium sized, high payload, modular jack-up platform. Has low international transport costs coupled with high performance capabilities. The vessel has recently undergone works to provide more expansive use of deck space and hydraulic system enhancement to provide jacking speed 3 times faster than 'standard'.

The jack-up's modular design allows the Aran 250 to provide a cost effective solution to perform a wide variety of functions from geotechnical investigations to excavation and construction.

With a large deck area, the Aran 250 can cater for a wide range of drilling, craneage and specialist in situ sampling and testing applications.

The Aran 250 has a rapid deck elevating system and is equipped with four legs to provide maximum strength and stability.

Assembly and commissioning of the jack-up superstructure is achieved in two or three days allowing a rapid mobilisation of the required plant, equipment and ancillaries.

The Aran 250 is equipped with three moon pools through the deck.

Tug boat towing Aran 250 to site.

Aran 250 on site in Storstrom, Denmark.

SPECIFICATIONS

Aran 250 Jack-up Barge

Classification society:	GL (Germanischer Lloyds)
Notation:	Non propelled self-elevating unit
Build year:	2008 (full upgrade 2018)
Jacking system:	Hydraulic/leg pucks
Max. separation:	30 m (length of leg below hull)
Max. payload:	250 t
Gross tonnage:	275 t

Length:	27 m (total including scow ends)
Breadth:	17.1 m
Moulded depth:	2.44 m
Number of legs:	4
Max. leg length:	36 m (3 x 12 m sections)
Leg dia.:	1.220 m

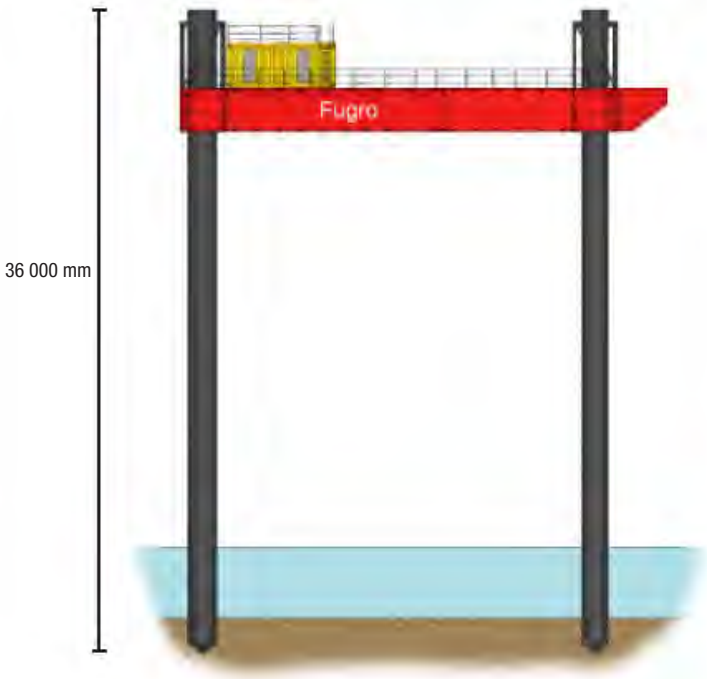

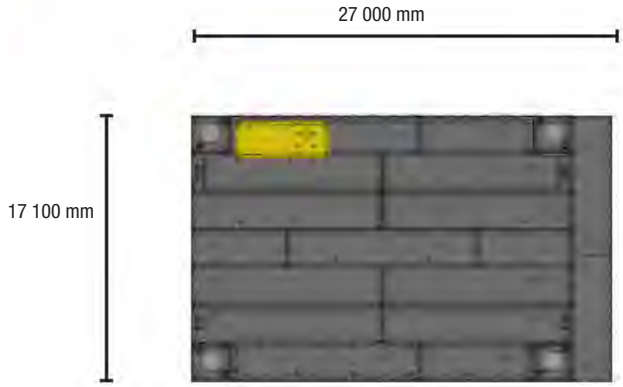

© FUGRO 08 2018/FGSL-FAL/AR250

geoservices.uk@fugro.com

WWW.FUGRO.COM

HORIZON GEOSCIENCES

QUEST HORIZON

VESSEL FEATURES

- DP-2
- Multipurpose Site Investigation Vessel
- Kongsberg K-Pos DP-21
- cJoy Independent Joystick System
- Conference room, offices, online/offline rooms
- Accommodation for 58 personnel
- Dayrooms and mess rooms
- 370 m² deck area
- Moon-pool 4 m x 3.6 m

The following equipment available subject to project requirements:

GEOTECHNICAL EQUIPMENT

- Heave Compensated Drill Rig
- Wison-APB Sampling, PCPT and Down-hole Vane Testing Equipment
- Containerized mud mix & transfer system
- Fully equipped offshore soil testing laboratory
- 200 kN seabed CPT system
- ROSON 40 kN CPT system
- Vibro / Drop / Gravity Coring

POSITIONING SYSTEM

- Dual Veripos Apex DGPS

GEOPHYSICAL EQUIPMENT

Analogue Geophysical

- Side scan sonar
- Sub bottom profiler (pinger / boomer)
- Magnetometer / Gradiometer for UXO Surveys
- Multi Beam Echosounder
- Single Beam Echosounder
- Motion sensors
- CTDS system
- Underwater positioning system

2D HR DIGITAL SEISMIC EQUIPMENT

- (optional)

ROV EQUIPMENT

- Rovotics Shark G2 inspection class ROV

PRINCIPAL PARTICULARS

- Year Built: 2013
- Builder: POET, China
- Classification Society: American Bureau of Shipping (ABS)
- Class Notifications: ✠A1, Offshore Support Vessel, Ⓔ, ✠AMS, ✠DPS-2
- Additional Notations: UWILD, CRC, RW
- Flag: Panama
- Call Sign: 3FQR9
- IMO Number: 9694218
- ISPS Code Compliant: YES

DIMENSIONS

- Length Overall: 65 m
- Breadth Moulded: 16.2 m
- Depth, Main Deck: 6 m
- Design Draft: 4.70 m
- Dead Weight: 1,569 T (Full Load)

CAPACITIES

- Fuel Oil: 430 m³
- Portable Water: 500 m³
- Clear Deck Area: 370 m²
- Open Deck Strength: 5 T / m²

HORIZON GEOSCIENCES

PERFORMANCE

- Maximum Speed: 12 knots
- Endurance: 45 days

MACHINERY

- Main Engines: 2 x Niigata 6L 26 HLX 1471 KW @ 750 Rpm

  2 x Nigata
- Propulsion: Fixed pitch Z drive propeller, kort nozzle
- Bow thrusters: 2 x 630 kw Rolls Royce
- Generators: 4 x 560 kw Caterpillar 3 phase – 415 volts, 50 HZ
- Emergency Generator: 1 x 136 kw Volvo Penta D7A-T

DYNAMIC POSITIONING

- Make: Kongsberg K-Pos DP
- Capacity: 1 x HiPAP 501, 2 x DGPS Veripos, 1 x Radius 1000, 1 x LWT Taut wire

DECK CRANE

- Make: S. China Marine Mcy Co
- Capacity: Two fall @ 12 m 30 T, Two fall @ 24 m 15 T

COMMUNICATIONS

- V-SAT Internet and telephone
- VHF, GMDSS Radio Equipment etc.

DECK MACHINERY

- Anchor Windlass: Hydraulic Driven Double Gypsies
- Anchors: 2 x 1,980 kg HHP Stockless Bower Type
- Capstans: 2 x Vertical Type Capstans

LIFE SAVING APPLIANCE

- In Compliance with SOLAS 1974
- 1 x Fast Rescue Craft

ACCOMMODATION

- Total Capacity: 58
- Single Berth Cabins: 8
- Double Berth Cabins: 17
- Four Berth Cabins: 4
- Offices: 4
- Client: 1
- Vessel: 1
- Ops/Survey: 2
- Hospital: 1 x 1 bed
- Gymnasium: 1
- Recreation room: 1
- Mess room: 1

NAVIGATION EQUIPMENT

- 1 x Radar X band / 1 x Radar S Brand
- DGPS (IMO Approved)
- ECDIS (Transas)
- AIS
- Echo Sounder
- Speed Log
- 3 x Gyro Compass System
- Autopilot (Simrad)
- Weather Fax Receiver
- BNWAS
- GMDSS Radio Equipment
- Navtex Receiver

Note: This specification is subject to change without notice.

Survey example of SES-2000 quattro

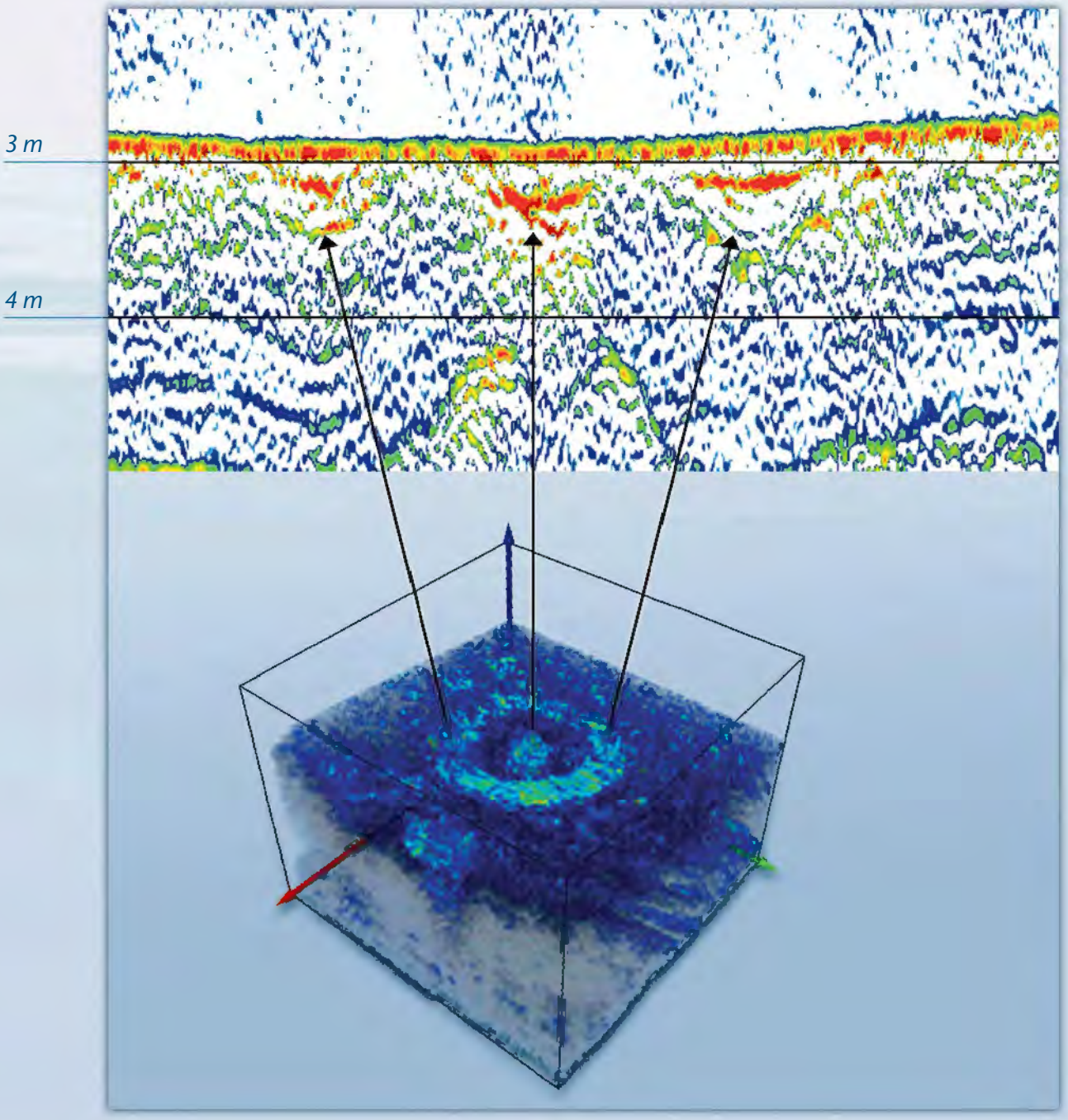

Wismar Bay echo plot example and 3D volume rendered area with embedded circular structure
Frequency 10 kHz, pulse length 100 µs, profile length 40 m (3D volume: 40 m x 40 m x 3 m)

Innomar Technologie GmbH

Schutower Ringstraße 4
D-18069 Rostock
Phone (Fax) +49 381 44079-0 (-299)
E-Mail info@innomar.com

Innomar

www.innomar.com

FUGRO
M.V. FUGRO HELMERT

The 41m M.V. Fugro Helmert, built in 2013, complements Fugro's existing fleet of vessels of a versatile, high-end and dynamic specification, designed for geophysical and hydrographic survey work on the continental shelf, up to water depths of 2000m.

The Fugro Helmert (capable of dynamic positioning – DP 1) is deployed for ROV inspection operations, geotechnical sampling, geophysical seabed charting and environmental data acquisition, catering in particular for the renewable energy market.

The survey systems carried aboard include: a Kongsberg EM 710 Mk2 (0.5 x 1.0°) high resolution multibeam echo sounder, an Innomar SES 2000 (Medium) and Knudsen 3260 (3 x 3 array) sub-bottom profilers, an Edgetech 4200 side scan sonar, a Geometrics G-882 marine magnetometer as well as a Kongsberg HiPAP 500 SSBL underwater acoustic positioning system.

A working deck of 180m² features an innovative container / equipment deck-fastening rail system, an interchangeable A-frame (9.4T capacity, working from either the stern or starboard position), an oceanographic, side scan and tugger winches, as well as a foldable-knuckle-boom deck crane. The vessel can accommodate a marine and survey crew of up to 20 persons, with an operational endurance of four weeks.

Equipment Deployment for Geological Sampling.

Shaded Relief Bathymetry showing Sandwave detail.

M.V. FUGRO HELMERT

Technical Specifications

General

Name	M.V. Fugro Helmert
Built	2013
Builder	Fr.Fassmer (Germany)
IMO No.	9662978
Call Sign	ZDNM8
Classification	DNV GL Research Vessel (+) MC E AUT DP1
Flag / Port	Gibraltar

Dimensions

Length Overall	41.53 m
Beam	10.00 m
Draft	3.4 m
Gross Tonnage	498
Net Tonnage	150
Deck space	180 m^2

Performance

Speed	11 kts (Cont. Transit)
Endurance (days)	20 Transit, 30 Survey

Accommodation

	20 (6x1, 7x2)

Capacities

Fuel (MGO)	70 m^3
Fresh water	15 m^3
Fresh water production	6 m^3 / day

Machinery

Main Engine	2 x 331 kW Shaft Power
Propulsion	2 x Schottel Rudder Propeller
Bow Thruster	1 x 200kW electric-drive
Generator	2 x 285 kVA or 244 kW
Power	400 V / 50 Hz 3 AC / PE 230V / 50 Hz 1 AC / PE

Communication

	GMDSS A4 / INMARSAT/ VSAT / IRIDIUM

Facilities

	1 x Data Acquisition room
	1 x Processing room
	1 x Survey workshop
	1 x Client's office
	1 x Survey store

Main Survey Systems

Multibeam Echo Sounder	Kongsberg EM 710 Mk2 (0.5 x 1°)
	Kongsberg EM 2040 (0.4 x 0.7°) dual RX
Side Scan Sonar	Edgetech 4200 (300/600 kHz)
Sub-Bottom profiler	INNOMAR SES 2000 Medium Knudsen 3260 3 x 3
Magnetometer	Geometrics G-882
Other	EIVA ScanFish Profiler Various SVP/CTD, XBTs
Acoustic Positioning	Kongsberg HiPAP 501 SSBL

Testing / Sampling

Cone Penetration Tester
Vibro Corer
Piston & Gravity Corer
Grab Sampler

Handling Equipment

Crane	1 x Palfinger PK50002 M knuckle-boom SWL 3 t / 12 m
A-frame	SWL 10 t Interchangeable (stern / stbd)
Winches	1 x 0.5 mt SWL
Primary	1 x Oceanographic SWL 5t, capacity 6,000 m (17 mm Coax), 1 x Geotechnical SWL 9 t Capacity 4,000 m (9 mm Dyneema®)
Secondary	1 x Oceanographic SWL 1.2 t Capacity 2,000 m (11 mm Coax)
Tugger	2 x SWL 3 t
Stern roller	4.2 m wide, max. load 10 t Multi-purpose deck-rail system to fit containers, lifting and handling gear

Other

	ROV / Crawler capability
	GL certified Kongsberg K-POS DP-11 (DP 1)

Information may be subject to change without prior notice.

© FUGRO 06 2017 / FCST

Ocean data, delivered.

Using Unmanned Surface Vessels (USVs) XOCEAN provides turnkey data collection services to surveyors, companies and agencies.

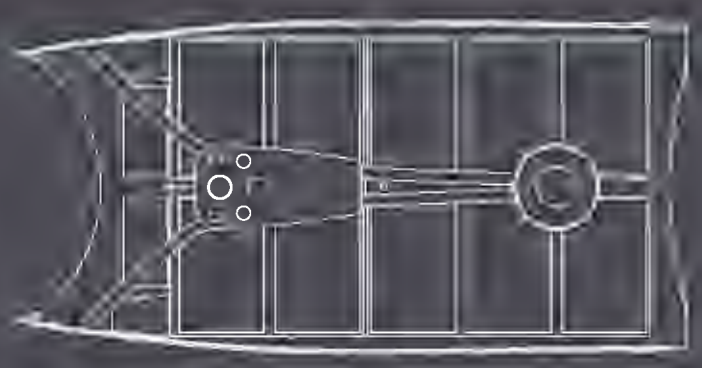

Physical Dimensions

Length	4.5m
Width	2.2m
Height	2.2m

Applications

Fisheries

Bathymetric Survey

Data Harvesting

Metocean Data

Environmental Monitoring

Technical Specification

Model name	XO-450
Hull	Composite wave piercing catamaran type
Weight	750kg
Payload	100kg
Propulsion	2 x DC drives
Steering	Differential steering
Hybrid power system	Solar deck | lithium-ion batteries | micro diesel generator
Continuous electrical load	3kW
Speed	4.0 knots
Endurance	18 days | range 1,512nm
Communications	Over horizon via satellite broadband
Control	Control via XOCEAN Cyberdeck
Situational awareness	AIS | thermal imaging camera visible light cameras | image detection
Conspicuity	Active radar reflector | AIS transmissions navigation lights | sound signals
Transportation	Road trailer | shipping container
Sensor mounting	Sonar post | SVP winch | MRU | weather station

XOCEAN®

xocean.com
info@xocean.com

xoceansocial xocean

© Copyright 2019. XOCEAN Limited, Greenore, Co. Louth, Ireland A91 E765. Company number 599121

XO-450

Unmanned Surface Vessel (USV) Specification

XOCEAN®

Oriel Wind Farm Landfall

Geophysical Investigation

Risk Assessment and Method Statement

For

Causeway Geotech Limited

Unit 6
Knockmullen Business Park
Gorey
Co. Wexford

Tel. 0402-21842
Fax: 0402-21843

Email: info@apexgeophysics.ie

PROJECT NUMBER	AGP21133		
PROJECT NAME	*Oriel Wind Farm Landfall Geophysical Investigation*		
AUTHOR	CHECKED	VERSION NO.	DATE
[redacted]	[redacted]	1	02/09/2021
[redacted]	[redacted]	2	07/09/2021

TABLE OF CONTENTS

1. BACKGROUND 3
1.1 Introduction 3
1.2 Methodology 4
1.3 Personnel 4
1.4 Safety Policy 4
1.5 Insurance 5
1.6 Tax Clearance 5
1.7 Working Hours 5
1.8 Work Program 5
1.9 Site Access 5
1.10 Topographic Data 5
1.11 On-site Interpretation 5
1.12 Deliverables 5
1.13 Requirements from the client 5
2. DETAILED METHODOLOGY AND RISK ASSESSMENT 6
2.1 Hazard Identification and Risk Assessment System: 6
2.2 ERT Profiling 7
2.3 Risk Assessment for ERT Profiling 7
2.4 P-Wave Seismic Refraction 8
2.5 Risk Assessment for P-Wave Seismic Refraction 8
2.6 Hospital Location 9
2.7 Site Welfare 9
2.8 Oriel Wind Farm Landfall Hazard Assessment and Risk Assessment 9
3. PERSONNEL RESOURCES ALLOCATED TO PROJECT 10
4. COMMUNICATION 11
4.1 Tool-Box Talks 11
APPENDIX A – SAFETY 12
APPENDIX B – FINANCIAL INFORMATION 13
APPENDIX C – EMERGENCY PROCEDURE 16
C.1 Introduction 16
C.2 Minor Accident on Site 16
C.3 Major Accident on Site 16
C.4 Accident Reporting 16
C.5 Assembly Point 17
C.6 First Aid 17
C.7 Emergency Contact Numbers 17
APPENDIX D – COVID 19 SPECIAL PRECAUTIONS: (HSE GUIDELINES) 18

1. Background

1.1 Introduction

Apex Geophysics Limited has been commissioned by Causeway Geotech Limited, on behalf of ESB, to carry out a geophysical investigation at the shoreline of the landfall point for the Oriel Windfarm 220 kV Grid Connection. The geophysical profiles will be carried out along the profiles shown in Figure 1. The purpose of the ground investigation is to determine ground conditions, to facilitate the design and construction of a high voltage cable route and landfall works.

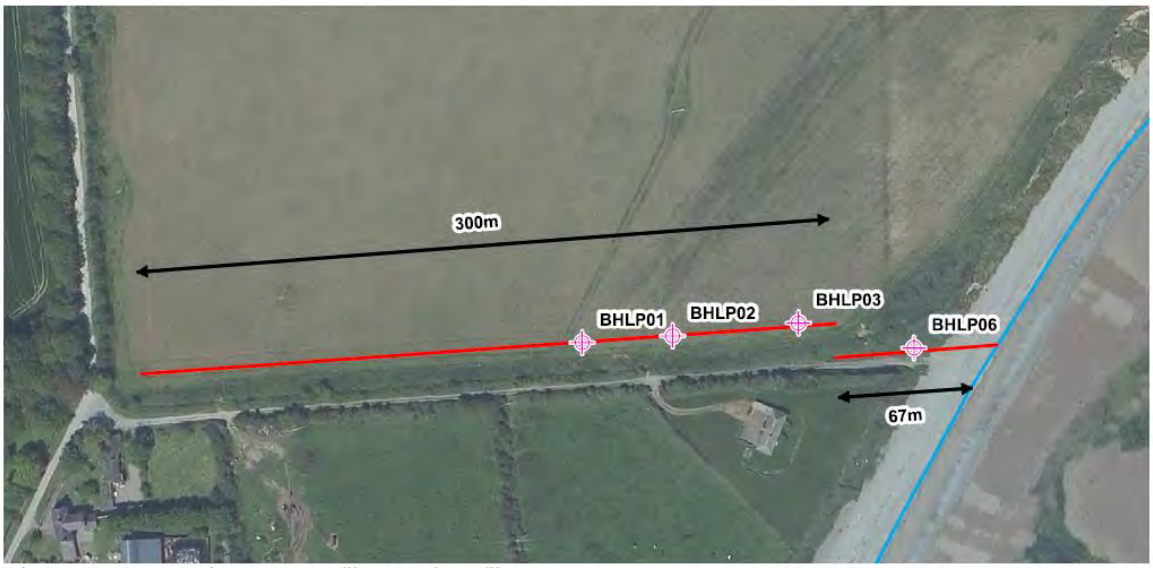

Figure 1: Proposed Survey profiles - red profiles.

This Method Statement has been prepared by Apex Geophysics Limited in order to demonstrate our planned site works methodology.

This RAMS document has been developed with cognisance to previous experience we have gained from working on similar sites.

OBJECTIVES

The objectives of the survey are to provide the following information:

- Type and thickness of the soils,
- Depth to and type of bedrock
- Presence of fracture zones and fault zones

1.2 Methodology

The following geophysical survey methodology will be carried out:

Method	Property Measured	Depth Range (m)	Information Obtained	Deliverables
Electrical Resistivity Tomography	apparent resistivity (Ohm-m)	0-20	• overburden type • bedrock profile • bedrock variations	• factual cross section • geological interpretation section
Seismic Refraction	seismic velocity (m/s)	0-15/23	• soil stiffness • bedrock profile • rock quality	• factual cross section • geological interpretation section
Report	Geological background, description of survey, factual data, discussion of results, conclusions and recommendations. Scaled maps and sections. Digital copies. All drawings in AutoCAD format.			

Electrical Resistivity Tomography

The ERT Profiles will be carried out, along the profiles, to provide information on type and thickness of the soils, depth to and variation in bedrock depth. The ERT profiles will be carried out using a 3 m electrode spacing to give depth of penetration of 15 to 20 m bgl. The profile on the beach/access road will be extended to 120m in length to provide sufficient depth of investigation and overlap with the profile in the field to the north.

During the works on the beach a marker will be placed at the high-water mark and no works will be carried out beyond this point.

Seismic Refraction

The seismic refraction profiles will be carried out along the ERT profiles. The seismic refraction method will provide information on the stiffness of the soil material, the depth to bedrock and the quality and degree of weathering of the bedrock. The seismic refraction spreads will consist of 24 geophones and 2 or 3m geophone spacing giving a depth of penetration of 15 to 23m bgl.

Limitations

As with all geophysical methods the interpretation of the data and resulting report are based on indirect readings of the subsurface properties. The effectiveness of the proposed approach will be affected by the variations of these properties. The presence of underground cables may affect the quality of the geophysical data.

The presence of underground services, buried foundations can cause interference on the geophysical datasets.

1.3 Personnel

The survey will be carried out under the direction of qualified and professionally registered geophysicists and experienced field personnel. All survey work will be supervised be a qualified crew leader who will be responsible for the correct use of all the equipment, the health and safety on the site and will liaise with the engineer to confirm any alterations or additions to survey works. The crew leader will remain in daily contact with the engineer with regard to survey progress and findings.

1.4 Safety Policy

Staff safe pass cards and manual handling certificates are included in Appendix A - Safety.

1.5 Insurance

APEX Geophysics Limited holds the following insurances:

- Employers Liability; €13,000,000
- Public Liability; €6,500,000
- Professional Indemnity; €2,500,000

A copy of the insurance details is shown in Appendix B - Financial.

1.6 Tax Clearance

APEX Geophysics Ltd. is fully tax compliant.

1.7 Working Hours

The field work will be carried out between the hours of 9:00 am and 5.30 pm.

1.8 Work Program

It is estimated that the survey will take 2 days to complete. The proposed work program is subject to ongoing change for the duration of the survey. The geophysical survey is planned to be carried out on the 9th and 10th September 2011. Changes in the work program may be caused by a number of internal and external factors including but not limited to: access difficulties, equipment failure.

1.9 Site Access

The client is responsible for clearing site access prior to mobilisation.

1.10 Topographic Data

The location of the geophysical readings will be surveyed using a sub-metre accurate GPS System.

1.11 On-site Interpretation

On-site interpretation of data will be carried out in order to monitor results and to allow for changes to be made to recording parameters as appropriate.

1.12 Deliverables

A report with maps and sections will be compiled in digital format

The geophysical report will include the following:

- An executive summary
- Introduction to the project, background, methodology, geology and site description
- Discussion of the results
- Appendices detailing the methods used, equipment used, field procedure and data processing.
- Maps and sections
- The maps and sections will be presented on an A3/A1 drawing. This drawing will detail the locations of the geophysical readings, the site extents and information on the underlying geology

1.13 Requirements from the client

We understand the client will provide:

- Site maps in digital format (if available)
- Existing trial pit and borehole logs
- Clear access to the survey area
- Removal of any surface obstructions
- Removal of livestock for the duration of the survey
- Any other relevant and available information prior to commencement of survey

2. Detailed Methodology and Risk Assessment

2.1 Hazard Identification and Risk Assessment System:

Hazard: Generally means anything that can cause harm. APEX Geophysics Limited has identified foreseeable workplace hazards, so far as reasonably practicable, associated with their business.

Risk: is the likelihood High, Medium or Low- that someone will be harmed by the hazard, together with the severity of the harm suffered. Risk is also dependent on the number of people exposed to the hazard.

Risk Assessment: is a careful examination of what could cause harm to people at work so that the employer can decide whether enough control measures are in place or if more are required.

Risk Rating Formula:
In the Risk Assessment severity and likelihood have been calculated as follows:
The risk factor is the multiple of Severity and Likelihood.

Severity	Likelihood	Value	Risk Rating	Characteristics
Major (3)	High (3)	7-9	High Risk	Possible Fatality
Serious (2)	Medium (2)	4-6	Medium Risk	Possible Minor Injury
Slight (1)	Low (1)	1-3	Low Risk	Unlikely /minor injury

		Severity		
		Major 3	Serious 2	Slight
Likelihood	High (3)	9	6	3
	Medium (2)	6	4	2
	Low (1)	3	2	1

Note:

The risk rating indicated is applicable when the controls in place are implemented. It is the responsibility of APEX Geophysics Limited to ensure that these precautions are adequate and put in place site specific controls, if necessary.

The list of hazards and controls in this Safety Statement are non-exhaustive and it is foreseeable that additional hazards will be encountered. If this situation occurs, then the work will stop and APEX Geophysics Limited must carry out a risk assessment and complete the “Hazards Not Identified” section in the Safety Statement to ensure that adequate control measures are in place and implemented.
If the work to be carried out is not safe, workers must not perform any tasks until management have been informed and the control measures are put in place.

2.2 ERT Profiling

Equipment:	Tigre AC resistivity meter capable of variable power inputs, ImagePro 2006 and Res2dinv imaging software, two 32 takeout multicore cables and 64 stainless steel electrodes. Equipment carried in 4WD vehicle 2 person crew Equipment calibrated across 100 ohm- resistor.
Field procedure:	Resistances are recorded to 10 levels using an expanding Wenner (or similar) array with a 3 or 5m electrode spacing as appropriate. Saline solution may be added to the electrodes in areas of high contact resistance. Local conditions and variations are noted.
Surveying:	Measurement and storage of each profile in ING using GPS system.
Data Processing:	Following conversion of the data to apparent resistivities, topographic corrections are applied to the data and an inversion is carried out using a least squares deconvolution technique to produce an apparent resistivity depth model.
Interpretation:	Assignation of material types and possible anomaly sources.
Presentation of Results:	Scaled plates produced for each profile showing the apparent resistivity and a corresponding interpretation of ground conditions. List of targets in order of priority with National Grid co-ordinates. All output in AutoCAD. Hard copy & digital data.

2.3 Risk Assessment for ERT Profiling

Procedure	Hazard	Risk	Risk Factors (Before Control Measures)	Hazard Prevention	Risk Factor After Control Measures
Mobilise resistivity equipment to survey area	Manual Handling	Physical Injury, strain	2	Use correct manual handling procedure	1
Lay out resistivity cable and electrodes to required geometry	Manual handling	Physical injury, strain	2	Use correct lifting procedure, get assistance	1
Connect laptop to power source and connect resistivity cable	Electric equipment	Electrocution	3	Follow manufacturer's guild lines for operating equipment	1
Check electrode resistivities	Electric equipment	Electrocution	2	Follow manufacturer's guild lines for operating equipment	1
Collect resistivity cable and electrodes	Manual handling	Physical injury, strain	2	Use correct lifting procedure	1
Disassemble resistivity equipment and return to Vehicle	Manual Handling	Physical Injury, strain	2	Use correct manual handling procedure using two operatives	1

2.4 P-Wave Seismic Refraction

Equipment:	Geode 24 channel digital seismograph, 10HZ vertical geophones, energy source (hammer source) as required to provide unambiguous first breaks. 1 or 1 x 24 take out cable and trigger geophone. Equipment carried in 4WD vehicle 2/3 person crew.
Field procedure:	Reversed refraction spreads with at least seven shots per spread. Geophone spacings and shot offsets used to allow continuous coverage of main refractor and adequate resolution of overlying refractors. Ongoing estimation of refractor velocities to monitor refractor type and depth.
Surveying:	Measurement and storage of each profile using GPS system in NG using GPS system. Tie to local control or OS base.
Data Processing:	First break picking in digital format suitable for input into Gremix or SIP software. Input topographic data. Inline spreads shall be compiled into longitudinal sections.
Interpretation:	Assignation of material types and estimation of material properties. Cross-reference to other data.
Presentation of Results:	Individual scaled plates of each spread or longitudinal section showing traveltime plot.

2.5 Risk Assessment for P-Wave Seismic Refraction

Procedure	Hazard	Risk	Risk Factors (Before Control Measures)	Control Measures	Risk Factor After Control Measures
Lay out seismic cable and geophones to required geometry	Manual handling	Physical injury, strain	2	Use correct lifting procedure, get assistance	1
Connect laptop to power source and connect seismic cable	Electric equipment	Electrocution	1	Follow manufacturer's guild lines for operating equipment	1
Hammer seismic plate to generate seismic wave	Loud noise, manual handling	Ear injury, physical injury	2	Wear correct PPE (ear protectors), use correct handling procedure for sledge hammer	1
Collect seismic cable and geophones	Manual handling	Physical injury, strain	2	Use correct lifting procedure	1

P.P.E.
All personnel shall arrive to site with the appropriate PPE for the task at hand. PPE shall include high visual vest, gloves, safety helmet and safety boots.

Manual Handling Risk Assessment
APEX Geophysics Ltd has identified the following field operations which have been assessed following guidance from HSA documents INDG383 and L23.
These are the following: -

- Instrument lifting and carrying
- Cable lifting and carrying

These field operations are all considered low to medium risk and are carried out on a daily basis by APEX Geophysics Ltd staff with appropriate manual handling training.

2.6 Hospital Location

The closest hospital to the site is Our Lady of Lourdes Hospital, Windmill Road, Moneymore, Drogheda, Co Louth A92 VW2B. Tel: 041 983 7601

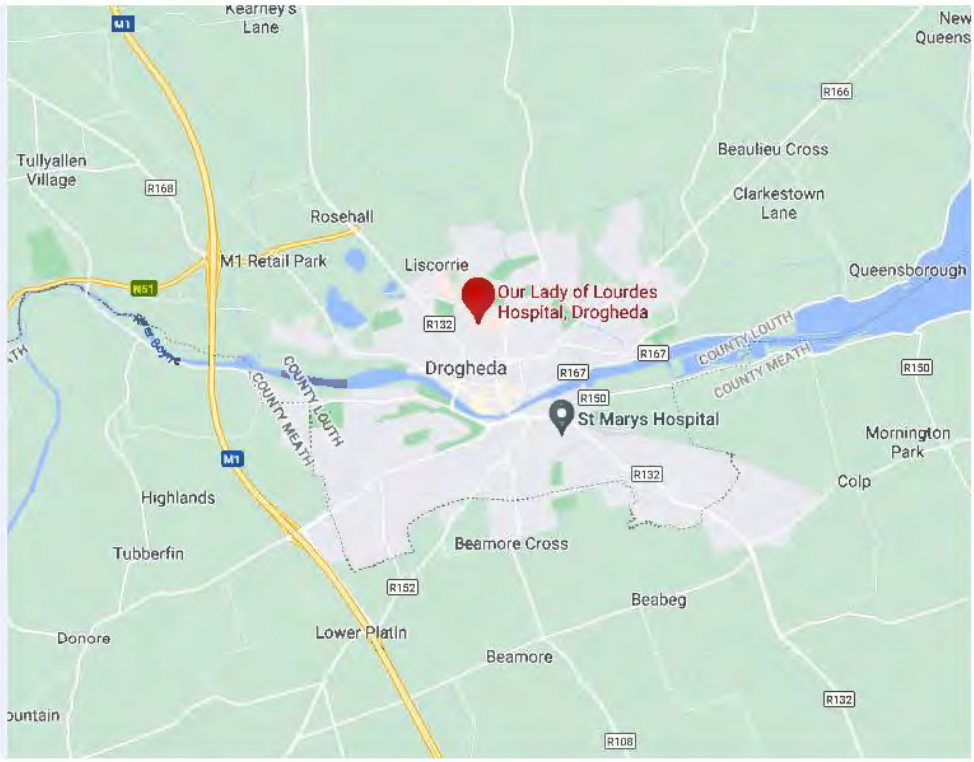

2.7 Site Welfare

Toilets	To be assessed upon arrival to site. If none on site, closest welfare facilities available for use
Washing Facilities:	To be assessed upon arrival to site. If none on site, closest welfare facilities available for use. Carry antiseptic hand cleaner in vehicle as a minimum
Rest Areas:	To be assessed upon arrival to site. If none on site, closest welfare facilities available for use
Drinking Water:	Carry own drinking water
Area for changing clothes and storing clothing:	To be assessed upon arrival to site. If none on site, closest welfare facilities available for use

2.8 Oriel Wind Farm Landfall Hazard Assessment and Risk Assessment

HAZARD IDENTIFICATION & RISK ASSESSMENT					
Project	Oriel Wind Farm		Company	APEX Geophysics Ltd	
Techniques	ERT and SR		Address	Unit 6, Knockmullen Retail Park, Gorey, Co. Wexford	
Date	02/09/2021		Phone	+353 402 21842	
Prepared	[redacted]		Checked	TL	

Hazard	Risk	Risk Assessed As	• Control Measures	Risk After Control Measure
Covid -19	Serious Illness/Death	6	• Follow HSE Guidelines included in Appendix E • Separate vehicles will be used for each crew member • Each item of equipment will be assigned to individual crew member and no crossover allowed • wash your hands frequently with soap and water or use an alcohol-based hand rub if your hands are not visibly dirty • practice good respiratory hygiene, that is, when coughing and sneezing, cover your mouth and nose with flexed elbow or tissue – discard tissue immediately into a closed bin and clean your hands with alcohol-based hand rub or soap and water • maintain physical distancing, that is, leave at least 2 metres (6 feet) distance between yourself and other people, particularly those who are coughing, sneezing and have a fever • avoid touching your eyes, nose and mouth – if you touch your eyes, nose or mouth with your contaminated hands, you can transfer the virus	3

HAZARD IDENTIFICATION & RISK ASSESSMENT					
Project	Oriel Wind Farm		Company	APEX Geophysics Ltd	
Techniques	ERT and SR		Address	Unit 6, Knockmullen Retail Park, Gorey, Co. Wexford	
Date	02/09/2021		Phone	+353 402 21842	
Prepared	[redacted]		Checked	TL	

Hazard	Risk	Risk Assessed As	• Control Measures	Risk After Control Measure
			from the surface to yourself • Gloves to be worn at all times	
Interaction with general public	Confrontation	2	• Remain polite and courteous at all times • Refer any enquires Causeway Geotech Limited	1
Working in a public track, trips on cables/equipment	Minor/major injury	3	• Men-at-work and surveying warning signs will be placed along the seismic and ERT cables. • The survey profile along the access road to the beach will be placed at the edge of the track and access to the beach will be kept clear from obstruction at all times	1
Driving to and on site in vehicle	Minor, major injury or death	4	• Driver has current driving licence, valid 'business' insurance, NCT and road tax. • Vehicle fuelled prior to arriving on site • Maintain vehicle in a roadworthy condition. • Ensure person is fit to drive. • Adhere to Rules of the Road, speed limits. • Do not drive in adverse weather or when excessively tired. • Allow sufficient time to familiarise oneself with the controls of vehicle. • Consider overnight stay and/or shared driving if practicable. • Where possible use designated parking spaces or	2

HAZARD IDENTIFICATION & RISK ASSESSMENT					
Project	Oriel Wind Farm		Company	APEX Geophysics Ltd	
Techniques	ERT and SR		Address	Unit 6, Knockmullen Retail Park, Gorey, Co. Wexford	
Date	02/09/2021		Phone	+353 402 21842	
Prepared	[redacted]		Checked	TL	

Hazard	Risk	Risk Assessed As	• Control Measures	Risk After Control Measure
			liaise with landowner/site rep to agree parking arrangements • All vehicles will have an orange flashing beacon for use on site if required	
Working on uneven and steep ground, and areas of poor access, Slips, trips and falls	Minor/major injury	4	• Visual appraisal of work area. • Work in adequate level of lighting. • Wear safety footwear. • Constantly review work area and keep tidy. • The work is to be carried out a pace suitable to the local ground conditions • Work in brashed and open areas and report any access issues	1
Animals. Rats	Leptospirosis (Weil's Disease)	6	• When working near/on landfill or where rats are likely to be, care to be taken to disinfect all cuts and cover them with waterproof plasters. • Report to supervisor or to GP if feeling unwell	2
Low vegetation cover on the ground, slip/trip/fall	Minor/major injury	4	• Experienced personnel • Wear correct safety footwear • When setting out resistivity cables two crew members will set out the profiles	1
Adverse Weather	injury /hyperthermia	3	• Consult weather forecast prior to work • suspend working in extreme weather conditions	1

HAZARD IDENTIFICATION & RISK ASSESSMENT					
Project	Oriel Wind Farm		Company	APEX Geophysics Ltd	
Techniques	ERT and SR		Address	Unit 6, Knockmullen Retail Park, Gorey, Co. Wexford	
Date	02/09/2021		Phone	+353 402 21842	
Prepared	[redacted]		Checked	TL	

Hazard	Risk	Risk Assessed As	• Control Measures	Risk After Control Measure
Using Geophysical Equipment	Physical Injury, Cuts. Pinching. Puncture. Impact Injuries. Eye Injuries. Electric Shock. Hearing impaired deafness. Strain / Sprain.	4	• Hold tool-box talks at the start of each morning to discuss all risks • Always use correct tool for job on hand. • Wear suitable protective equipment depending on method– gloves, safety glasses, ear protection, hard hat and safety boots. • Quickly inspect equipment before use – make sure equipment is in good working order • Unplug tools when not in use. • Don't use damaged, worn or dangerous equipment – report to supervisor.	1
	Fire risk	2	• All equipment will be in good working order • Keep clear from all indentified explosion risk zones • No 220V equipment will be used	1
Manual Handling	Physical Injury, strain	4	• Avoid hazardous manual handling operations so far as is reasonably practicable • Make a suitable and sufficient assessment of any hazardous manual handling operations that cannot be avoided • Follow safe manual handling procedures • Ensure personnel have received manual handling training	1

HAZARD IDENTIFICATION & RISK ASSESSMENT					
Project	Oriel Wind Farm		Company	APEX Geophysics Ltd	
Techniques	ERT and SR		Address	Unit 6, Knockmullen Retail Park, Gorey, Co. Wexford	
Date	02/09/2021		Phone	+353 402 21842	
Prepared	[redacted]		Checked	TL	

Hazard	Risk	Risk Assessed As	• Control Measures	Risk After Control Measure
Un-clean work areas	Illness	2	• Suitable safety gloves to be worn at all times • Wash hand before eating • Wash hands after using bathroom	1
General Health	Tiredness, illness	4	• Use site facilities including toilet, drying rooms and canteen if available • Ensure vehicle first aid box is easily accessible and fully stocked • Ensure personnel are in good health before carrying out the survey.	1
Other Hazards on Site (to be completed by project supervisor)			•	•

P.P.E. All personnel shall arrive to site with the appropriate PPE for the task at hand. PPE shall include high visual vest and trousers, gloves, safety boots, hard hat, and safety glasses.

3. Personnel Resources Allocated to Project

The following table details the project team that will be responsible for the survey.

name	position	mobile	email	responsibilities
[redacted]	Managing Director	00353 87 [redacted]	[redacted]@apexgeophysics.ie	Health and Safety Processing and Reporting
	Senior Geophysicist	00353 87 [redacted]	[redacted]@apexgeophysics.ie	Project Manager Processing and Reporting
	Senior Geophysicist	00353 87 [redacted]	[redacted]apexgeophysics.ie	Processing and reporting
	Senior Geophysicist	00353 87 [redacted]	[redacted]@apexgeophysics.ie	Senior Geophysicist
	Geophysicist	00353 [redacted]	[redacted]@apexgeophysics.ie	Processing and Reporting
	Contracts Manager	00353 87 [redacted]	[redacted]apexgeophysics.ie	Contracts Data Acquisition
	Geophysicist	00353 87 [redacted]	[redacted]apexgeophsics.ie	Data Acquisition Processing and Reporting
	Geophysicist	00353 87 [redacted]	[redacted]@apexgeophsics.ie	Processing and Reporting
	Senior Geophysical Technician	00353 87 [redacted]		Data Acquisition

The APEX Geophysics Limited Project Manager will be [redacted]. [redacted] will manage all aspects of the project including the data acquisition, processing and reporting. The processing, interpretation, drafting and reporting will be carried out by [redacted]

[redacted] will be the site supervisor and will be directly responsible for the acquisition of the data. The survey team will consist of [redacted].

Client Contacts:

name	company	telephone	email
[redacted]	Causeway Geotech Limited	Tel: +353 (0)1 526 7465 M: +44 (0)75 [redacted]	[redacted]@causewaygeotech.com
[redacted]	ESB	089 [redacted] 0044 [redacted]	[redacted]@esb.ie

4. Communication

4.1 Tool-Box Talks

Every morning a tool-box talk will be held by the field crew prior to the start of work. The APEX Geophysics Limited site supervisor will discuss the following with the field crew:

- Review previous day's work and highlight any hazards identified
- Set out the proposed work schedule for the day
- Ensure all staff have correct PPE and are in good health
- Check weather forecast to ensure safe working conductions
- Check all survey equipment and vehicle

I confirm that I have read and understood this method statement and risk assessment.

Signed: _____ Date: _____

Print Name _____

Signed: _____ Date: _____

Print Name _____

Signed: _____ Date: _____

Print Name _____

Signed: _____ Date: _____

Print Name _____

Signed: _____ Date: _____

Print Name _____

Signed: _____ Date: _____

Print Name _____

Signed: _____ Date: _____

Print Name _____

APPENDIX A – Safety

Enclosed are:

Safety Certificates

Health and Safety Training

[redacted] Contracts Manager

[redacted] Irish **DOB** [redacted]
Profession Contracts Manager

Safe Pass [redacted]

Driving Licence [redacted]

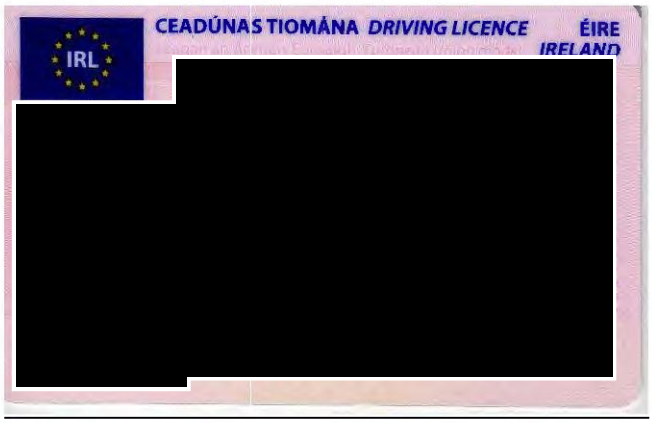

Health and Safety Training

Manual Handling	ASL

ASL SAFETY & TRAINING

This is to certify that:

[redacted]

Has Successfully C[redacted] Training Course
and Passed a Practical Assessment in
MANUAL HANDLING
[redacted]

Signed, [redacted]

[redacted]

DRIVERcpc QQHCR QQI LANTRA AWARDS APPROVED RTITB ACCREDITED SOLAS

www.aslsafety.com

PTS	04/09/2023

CONTRACTOR CERTIFICATE OF COMPETENCE

Iarnród Éireann Infrastructure

[redacted]

[redacted]

NOT VALID FOR TRAVEL CONCESSIONS

ATV Certification	Sit Astride ATV

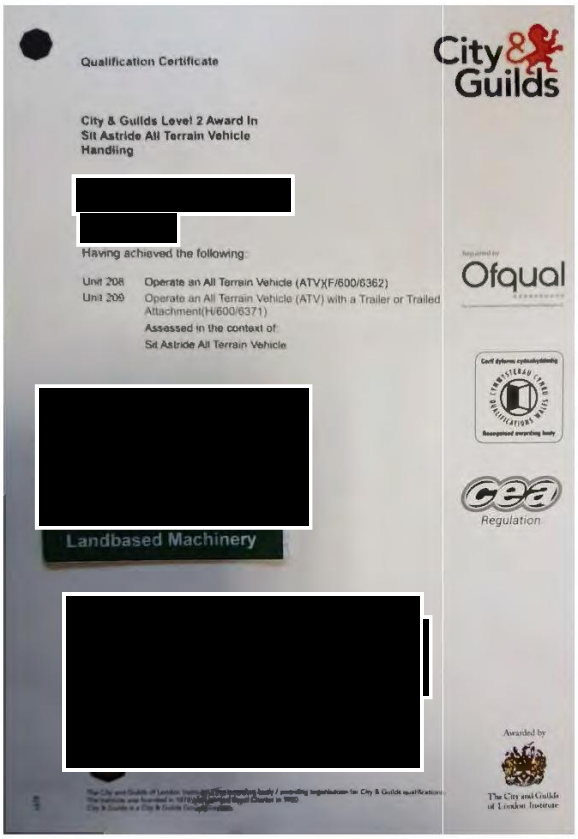

Qualification Certificate

City & Guilds Level 2 Award In Sit Astride All Terrain Vehicle Handling

[redacted]

Having achieved the following:

Unit 208 Operate an All Terrain Vehicle (ATV)(F/600/6362)
Unit 209 Operate an All Terrain Vehicle (ATV) with a Trailer or Trailed Attachment(H/600/6371)
Assessed in the context of:
Sit Astride All Terrain Vehicle

[redacted]

Landbased Machinery

[redacted]

City & Guilds

Ofqual

Regulation

Awarded by

The City and Guilds of London Institute

Sea Survival	Sea and Shore Safety Services Limited

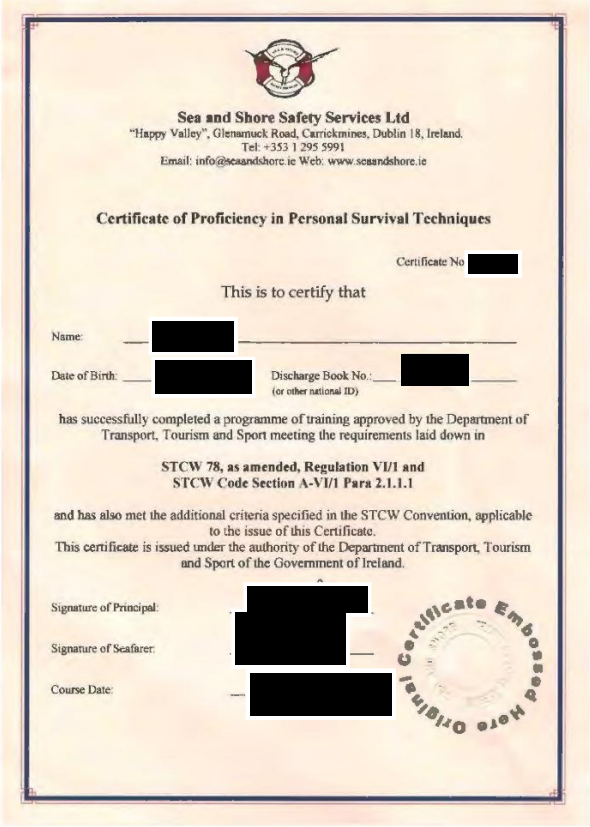

Sea and Shore Safety Services Ltd
"Happy Valley", Glenamuck Road, Carrickmines, Dublin 18, Ireland.
Tel: +353 1 295 5991
Email: info@seaandshore.ie Web: www.seaandshore.ie

Certificate of Proficiency in Personal Survival Techniques

Certificate No [redacted]

This is to certify that

Name: [redacted]

Date of Birth: [redacted] Discharge Book No.: [redacted]
(or other national ID)

has successfully completed a programme of training approved by the Department of Transport, Tourism and Sport meeting the requirements laid down in

STCW 78, as amended, Regulation VI/1 and STCW Code Section A-VI/1 Para 2.1.1.1

and has also met the additional criteria specified in the STCW Convention, applicable to the issue of this Certificate.
This certificate is issued under the authority of the Department of Transport, Tourism and Sport of the Government of Ireland.

Signature of Principal: [redacted]

Signature of Seafarer: [redacted]

Course Date: [redacted]

Certificate Embossed Here Original

Health and Safety Training

[redacted] **Geophysical Technician**

Nationality	Irish	DOB	[redacted]
Profession	Geophysical Technician		

Safe Pass	[redacted]

Driving Licence	[redacted]

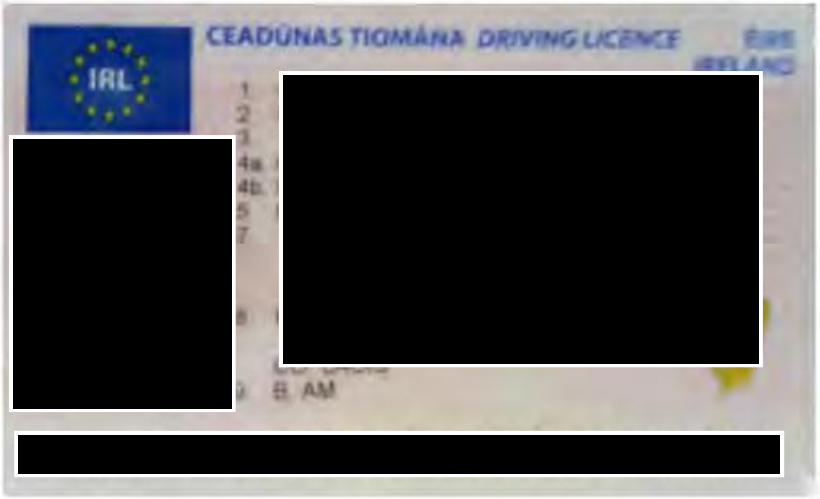

Health and Safety Training

Manual Handling	[redacted]

CHSS

CORK HEALTH AND SAFETY SERVICES

Certificate of Attendance
Manual Handling

This is to certify that

[redacted]

has successfully completed the Manual Handling training course in accordance with the Safety, Health and Welfare at Work (Gen. App) Regulations 2007 (S.I. No. 299)

[redacted]

Refresher course advised every 3 years ¦086 6611597 ¦ info@chss.ie

Location Underground Services	[redacted]

SOLAS
learning works

Construction Skills Certification Scheme

[redacted]

Signatur[redacted]

LOCATION OF UNDERGROUND SERVICES

This card is the property of SOLAS. If found please return to
SOLAS, Block 1, Castleforbes House, Castleforbes Road, Dublin 1 Tel: 01-5332500

PTS	[redacted]

CONTRACTOR CERTIFICATE OF COMPETENCE

Iarnród Éireann Infrastructure

[redacted]

NOT VALID FOR TRAVEL CONCESSIONS

Health and Safety Training

ATV Certification	Sit Astride ATV

City & Guilds

City & Guilds Level 2 Award In
Sit Astride All Terrain Vehicle
Handling (QCF)

Accreditation Number [redacted]

[redacted]

Having achieved the following:

Unit 208 Operate an All Terrain Vehicle (ATV)(F/600/6362)
Unit 209 Operate an All Terrain Vehicle (ATV) with a Trailer or Trailed Attachment(H/600/6371)
Assessed in the context of:
Sit Astride All Terrain Vehicle

[redacted]

Ofqual

Llywodraeth Cymru
Welsh Government

[redacted]

ATV Certification	Sit In ATV

City & Guilds

City & Guilds Level 2 Award in
Sit In All Terrain Vehicle
Handling (QCF)

Accreditation Number: [redacted]

[redacted]

[redacted]

Ofqual

Llywodraeth Cymru
Welsh Government

[redacted]

APPENDIX B – Financial Information

Enclosed are:

Insurance Certificates

BUSINESS INSURANCE | MOTOR INSURANCE | HOME INSURANCE | FARM INSURANCE

DOYLE MAHON INSURANCES

Unit 1 Ardcavan Business Park,
Ardcavan, Wexford Y35NP49
Tel: 053 91 23630
Email: info@doylemahon.ie

EVIDENCE OF LIABILITY COVER NOTE

INSURED:	Apex Geophysics Ltd
ADDRESS:	Unit 6, Knockmullen Retail Park, Gorey, Co. Wexford
TYPE:	Combined Liability Policy
BUSINESS DESCRIPTION:	Geophysical Surveyors
RENEWAL DATE:	26/02/2022
UNDERWRITERS:	Axis
POLICY NUMBER:	B1759IC128666X
EMPLOYERS LIABILITY	
Limit of Indemnity	€13,000,000
PUBLIC LIABILITY	
Limit of Indemnity	€ 6,500,000
EXCESS:	€ 5,000

For Doyle Mahon Insurances

[redacted]

IMPORTANT NOTICE:
Please examine this Cover Note carefully and return it immediately to us if it is not in accordance with your instructions. Similarly, if there is any aspect of this Cover Note which you do not fully understand, you should contact us without delay.

We would particularly draw your attention to the section outlining Policy Conditions - any breach of Suspensive Conditions of failure to comply with Conditions will render your cover null and void. If you have any query in this regard you should contact us immediately.

WWW.DOYLEMAHON.IE
WWW.IRISHPROFESSIONALINDEMNITY.IE

Doyle Insurance Brokers (Wexford) Ltd
trading as Doyle Mahon Insurances
Is regulated by The Central Bank
Directors: Patrick Doyle (Managing) | Andrew Doyle | Colm Mahon
Registered Office: Unit 1 Ardcavan Business Park, Wexford. Y35 NP49 |
Registered Number: 463420

BROKERS IRELAND BFI

BUSINESS INSURANCE | MOTOR INSURANCE | HOME INSURANCE | FARM INSURANCE

DOYLE MAHON INSURANCES

Unit 1 Ardcavan Business Park,
Ardcavan, Wexford Y35NP49
Tel: 053 91 23630
Email: info@doylemahon.ie

EVIDENCE OF PROFESSIONAL INDEMNITY COVER NOTE

INSURED:	Apex Geophysics Ltd
ADDRESS:	Unit 6, Knockmullen Retail Park, Gorey, Co. Wexford
TYPE:	Professional Indemnity Policy
BUSINESS DESCRIPTION:	Geophysical Surveys & Geological Surveys to the Engineering, Environmental & Natural Resources
RENEWAL DATE:	01/07/2021
UNDERWRITERS:	First Ireland Risk Management
POLICY NUMBER:	IE00018115EO17A
LIMIT OF INDEMNITY:	€2,500,000 any one incident
EXCESS:	€15,000 each and every claim

For Doyle Mahon Insurances

[redacted]

IMPORTANT NOTICE:
Please examine this Cover Note carefully and return it immediately to us if it is not in accordance with your instructions. Similarly, if there is any aspect of this Cover Note which you do not fully understand, you should contact us without delay.

We would particularly draw your attention to the section outlining Policy Conditions - any breach of warranties of failure to comply with Conditions will render your cover null and void. If you have any query in this regard you should contact us immediately.

WWW.DOYLEMAHON.IE
WWW.IRISHPROFESSIONALINDEMNITY.IE

Doyle Insurance Brokers (Wexford) Ltd.
trading as Doyle Mahon Insurances
Is regulated by The Central Bank
Directors: Patrick Doyle (Managing) | Andrew Doyle | Colm Mahon
Registered Office: Unit 1 Ardcavan Business Park, Wexford. Y35 NP49 |
Registered Number: 463420

BROKERS IRELAND BFI

APPENDIX C – Emergency Procedure

C.1 Introduction

The first step upon becoming aware of an emergency situation is to assess that situation to determine if it is a minor or major incident. Once this has been clarified follow the relevant procedure detailed below.

C.2 Minor Accident on Site

1) Notify the Site Supervisor [redacted] or designated representative immediately
2) The Site Supervisor will then contact the APEX Geophysics Limited Project Manager ([redacted]).
3) Site Supervisor to make the area around the scene of the accident safe and cordon it off.
4) The Project Manager will notify the Causeway Geotech Limited representative ([redacted]).
5) First aid kit is available in the site vehicle.
6) Site Supervisor to arrange transportation for the injured person to Connolly Hospital to be examined by a doctor.
7) All personnel to comply with the Site Supervisors instructions.
8) Area to remain cordoned off until further notice from the Site Supervisor.
9) All personnel to assist the Site Supervisor in filling out details of the accident for the H & S file – please refer to Accident Reporting procedure hereafter.

C.3 Major Accident on Site

1) Notify the Site Supervisor or designated representative immediately.
2) The Site Supervisor will then contact the APEX Geophysics Limited Project Manager [redacted]).
3) Dial Emergency Services on 999/112, state the emergency and give the site location.
4) The Project Manager will notify the Causeway Geotech Limited representative ([redacted]
5) All personnel on site shall be instructed to report to designated Assembly Area
6) Under the direction of the Site Supervisor a role call will be undertaken to determine who is on site and that everyone is accounted for.
7) Site Supervisor to make the area safe around the scene of the accident and cordon off.
8) First aid box available in available in the Site Vehicle
9) Site Supervisor to co-ordinate with the emergency services so they can be directed to the scene of the accident.
10) All personnel to comply with Emergency Services upon arrival on site.
11) Area to remain cordoned off after Emergency Services have left the site.
12) All personnel to assist the Site Supervisor in filling out details of the accident for the H & S file – please refer to Accident Reporting procedure hereafter.

C.4 Accident Reporting

1) All accidents and near misses are to be reported to the Site Supervisor
2) The Site Supervisor will then contact the APEX Geophysics Limited Project Manager [redacted] to alert her of the situation
3) The Project Manager will investigate every incident/near miss through consultation with the relevant parties and collate all the resultant information.
4) An incident report form shall be filled out by the Site Supervisor/Project Manager once all the facts have been gathered and then reported back to Causeway Geotech Limited.

5) Corrective action procedures or mitigation measures shall be implemented by the Site Supervisor and Project Manager.
6) Accidents that result in more than three days absence from work will be reported to the Health and Safety Authority (HSA) in accordance with statutory requirements.

C.5 Assembly Point

1) Due to the size of the site and mobile nature of the works a temporary assembly point will be selected at the start of each work session and communicated to all personnel on site.

C.6 First Aid

1) First aid box available is available in the Site Vehicle.

C.7 Emergency Contact Numbers

name	telephone
Emergency Services • Fire Service • An Garda Síochána • National Ambulance Service	999 or 112
Our Lady of Lourdes Hospital,	041 983 7601
Dundalk Garda Station	042 938 8400

APPENDIX D – COVID 19 Special Precautions: (HSE Guidelines)

To protect yourself and others from coronavirus (COVID-19) it is important to think about how the virus is spread. Coronavirus is spread in sneeze or cough droplets. To infect you, it has to get from an infected person's nose or mouth into your eyes, nose or mouth. This can be direct or indirect (on hands, objects, surfaces). Keep this in mind. It will help you remember all the things you need to do to protect yourself and others from the virus.

Social distancing
Social distancing is important to help slow the spread of coronavirus. It does this by minimising contact between potentially infected individuals and healthy individuals.
Some of the things you can do:

Do

- keep a space of 2 metres (6.5 feet) between you and other people
- reduce physical interactions with people
- reduce the number of people you meet every day
- avoid communal sleeping areas
- avoid crowded places

Do not

- Do not shake hands or make close contact, if possible
- Help slow the spread of coronavirus
- To help slow the spread of coronavirus:
- anyone who has symptoms should behave as if they have the virus and self-isolate for 14 days
- everyone should limit unnecessary social contact as much as possible
- at-risk groups should avoid close contact with people outside the home
- How to protect yourself and others from coronavirus
- Follow this advice as strictly as possible and encourage others to follow this advice too.

Do

- Wash your hands properly and often.
- Cover your mouth and nose with a tissue or your sleeve when you cough and sneeze.
- Put used tissues into a bin and wash your hands.
- Clean and disinfect frequently touched objects and surfaces.
- Avoid close contact with people - keep a distance of 2 metres (6.5 feet) between you and others.
- Avoid crowded places, especially indoors.
- Stay at home if you are sick to help stop the spread of whatever infection you may have.

Do not

- Do not touch your eyes, nose or mouth if your hands are not clean.
- Do not share objects that touch your mouth – for example, bottles, cups.
- Do not shake hands.
- Wash your hands properly and often
- You should wash your hands:
- after coughing or sneezing
- before and after eating
- before and after preparing food

- if you were in contact with someone who has a fever or respiratory symptoms (cough, shortness of breath, difficulty breathing)
- before and after being on public transport if you must use it
- when you arrive and leave buildings including your home or anyone else's home
- if you have handled animals or animal waste
- before having a cigarette or vaping
- if your hands are dirty
- after toilet use
- Keep your hands in good condition, moisturise them often. Any basic product that is not perfumed or coloured is OK.

Disposable gloves

- Do not wear disposable gloves instead of washing your hands. The virus gets on them in the same way it gets on your hands. Also, your hands can get contaminated when you take them off.
- Disposable gloves are worn in medical settings. They are not as effective in daily life.
- Wearing disposable gloves can give you a false sense of security.

You might:

- sneeze or cough into the gloves - this creates a new surface for the virus to live on
- contaminate yourself when taking off the gloves or touching surfaces
- not wash your hands as often as you need to and touch your face with contaminated gloves

Face masks

- Wear a face mask when indoors and when the 2m rule cannot be followed
- Sick people will be advised by their doctor when to use a mask. Healthcare workers need masks and other personal protective equipment to protect them from infection during their work.

Keeping well

Infectious disease outbreaks like coronavirus (COVID-19) can be worrying. This can affect your mental health.

Coronavirus
COVID-19

Coronavirus
COVID-19
Public Health
Advice

Help prevent coronavirus

Wash your hands

Cover mouth if coughing or sneezing

Avoid touching your face

Keep surfaces clean

Stop shaking hands and hugging

Keep a safe distance

The virus spreads in sneeze and cough droplets, so regularly taking the above measures helps reduce the chance of it spreading.

Visit HSE.ie
For updated factual information and advice
Or call 1850 24 1850

Protection from coronavirus.
It's in our hands.

Rialtas na hÉireann
Government of Ireland

Coronavirus
COVID-19
Coronavirus
COVID-19
Public Health
Advice
Know the signs
High Temperature
Shortness of Breath
Breathing Difficulties
Cough
For 8 out of 10 people, rest and over the counter medication can help you feel better.
Wash
Cover
Avoid
Clean
Stop
2m
Distance
If you have symptoms, self-isolate to protect others and phone your GP.
Visit hse.ie for updated factual information and advice or call 1850 24 1850.
Protection from coronavirus.
It's in our hands.
Rialtas na hÉireann
Government of Ireland

Coronavirus
COVID-19

Coronavirus
COVID-19
Public Health
Advice

Who is most at risk?

People over 60

People with long term medical conditions
like heart disease, lung disease, diabetes and cancer

Please take extra care if this affects you or someone you know.

Wash

Cover

Avoid

Clean

Stop

2m

Distance

If you have symptoms, self-isolate to protect others and phone your GP. Visit hse.ie for updated factual information and advice or call 1850 24 1850.

Protection from coronavirus.
It's in our hands.

Rialtas na hÉireann
Government of Ireland

Protect yourself and others from getting sick
Wash your hands
• after coughing or sneezing
• when caring for the sick
• before and after you prepare food
• before eating
• after toilet use
• when hands are visibly dirty
• after touching cuts, blisters or any open sores
• you can use alcohol hand rub, if hands are not visibly dirty
www.hse.ie/handhygiene
RESIST
hpsc

Covid-19 Questionnaire / Self-Declaration

In the interests of safety of the people of this site, their families and the community, Site Management ask that you complete the following questionnaire / self-declaration. Your co-operation and support are appreciated. You will be requested to leave the site if you answer 'YES' to Questions 1, 2 or 3.

Question	Yes	No
1. Have you been in close contact with anyone who are confirmed with having COVID-19 virus?		
2. Do you live in the same household with someone who has symptoms of COVID-19 who has been in isolation within the last 14 days?		
3. Do you have any of the following typical COVID-19 symptoms; fever, high temperature, persistent coughing, or breathing difficulties / shortness of breath		
4. Have you returned to the island of Ireland from another country within the last 14 days?		
If **'YES'**, where?		

I confirm that I have responded to the questions above truthfully based on my current condition and I commit to advising the Site Management Team and excluding myself from site if this situation changes, (i.e. if a point in the future, I would answer "Yes" to any of the above questions).

Name _____

Company _____

Signature _____

Date _____

FUGRO
CABLE PERCUSSION BORING

Cable percussion boring has many technical advantages over other intrusive investigation techniques when operated by experienced and competent drillers.

DESCRIPTION

This relatively lightweight rig can be towed on the road and across sites to the borehole location by a 4x4 vehicle. The rig can excavate boreholes throughout a wide range of weak to solid engineering soils. As the borehole is progressed the hole can be stopped at any depth to perform in situ tests or monitor water/gas levels.

As it excavates in comparatively small lengths at a time it can be remarkably accurate when compared to alternative rotary techniques. Fugro's ancillary equipment includes a wide range of sampling and in situ testing equipment. Fugro's personnel resource ensures equipment is operated by competent, accredited and experienced drillers.

We have experience of constructing boreholes to depths in excess of 70 m using these rigs and a can start in a range of casing sizes between 150 mm and 300 mm diameter. On completion various monitoring installations can be installed.

Working off a scaffold platform.

Craned to location.

CABLE PERCUSSION BORING

Technical specifications

Dimensions of Equipment

Length travelling / in use	8.50 m/4.50 m
Width travelling / in use	1.80 m/2.20 m
Height travelling / in use	2.1 m/6.85 m
Drill hole to rear	3.50 m
Drill hole to right flank	1.10 m

Equipment Information

Make/Model	Dando 3000 Mk2
Plant No.	16908
Weight	2200 kg
Mode of transport	2 wheel, normally towed by 4x4 truck
Maximum diameter casing	300 mm

Power

Pull up (single line)	3000 daNm
Derrick max. loading	9000 kg

© FUGRO 07 2017 / FGSL

geoservices.uk@fugro.com

WWW.FUGRO.COM

DANDO

DUKE

Available in both trailer and track mounted versions, the new cutting edge Dando Duke cable percussion rig boasts a range of innovative features for increased efficiency and productivity.

WWW.DANDO.CO.UK

Easy Transportation

The Duke is available in both trailer and track mounted versions.

Mounted on a heavy duty twin axle trailer with built in lights, the Duke can be easily towed behind a regular pickup truck or van for easy transportation between sites.

Alternatively the Duke is available mounted on heavy duty tracks fitted with 2 speed tracking motors and the option of radio remote control or umbilical tracking.

Track mounted at max mast height (5.5m)

Various Drilling Positions

The mast has a large hydraulic ram built into the main mast body which allows it to extend to a maximum working height of 5.5m and a lower height of 4m.

The stainless steel support legs are also telescopic which allow the rig to be used in areas of restricted head room. There is no longer the need for the supports to be “walked around” into position therefore greatly reducing setup space.

Track mounted at low mast height (4m)

Hydraulically Powered

Driven by a water cooled modern diesel engine, hydraulic pumps provide hydraulic power to the stabilisers, mast, PTO and an infinitely variable winch which offers impressive speed and pulling power. The brake and clutch are pneumatically operated.

Hydraulic PTO

The external hydraulic power take off facilitates the quick connection of a variety of equipment including road breakers and casing jacks.

On-board Compressor

An 8m recoil air hose with 1/4” quick connect is fitted inside the rig for use with air tools and tyre inflation equipment.

Stability

When faced with uneven terrain, levelling of the rig is made easy thanks to four hydraulic stabilising jacks.

Optional Casing Jacks

With a PTO, Dando’s separate casing jacks can easily be coupled up to pull stuck casing.

Specification

CHASSIS	
Type	The main chassis of the rig is manufactured from steel laser cut and folded sections providing a rigid base
Levelling	The rig is levelled by 4 hydraulic jacks, one at each corner of the rig
Lifting Points	Rated lifting/tie down points as standard on all 4 corners

CARRIER	
Mounting Options	Trailer (Type O2) Crawler Unit

TRAILER SPECIFICATION	
Description	Heavy duty twin axle trailer rated to 3500kg
	Over-run auto reverse brakes
	Towing lighting fitted into canopy
	Quick change number plate as standard
	Reverse alarm
	Spare wheel carrier and tyre built into the front of the tow assembly, as standard
	HD serrated jockey wheel
	Hitch is available as eye or 50mm ball depending on the customer's preference

CRAWLER SPECIFICATION	
Description	Heavy duty tracks fitted with 2 speed tracking motors
	Tracks can be rubber, steel or hybrid steel rubber blocks
	Rear of the chassis is fitted with a combination towball and pin hitch
Approx. Ground Pressure	38 kPa (5.5 psi)
Tracking	Radio remote or umbilical
	Emergency override levers are fitted to the tracking valve

ENGINE	
Type	Perkins 1.5 L 403D-15 . Water cooled normally aspirated diesel engine fitted with a chalwyn spark arrestor as standard
Power	23.9 kw (32 hp)
Torque	94.4 Nm
Fuel Tank	Stainless steel construction Capacity: 44 L
Fuel Consumption	1-2 L per hour

MAST	
Type	Main mast section consists of a large box section that extends hydraulically allowing for variable working heights
	Telescopic support legs with adjustable feet for easy levelling and compact setup
Max Derrick SWL	6000 kg
Max Working Height	5.5 m
Min Working Height	4 m

HYDRAULIC SYSTEM	
Type	Main closed loop pump + two gear pumps
Hydraulic Tank	Stainless steel construction Capacity: 80 L
System Pressure (Max)	300 bar (4351 psi)
Filtration	10 micron charge filter and return line filter
Hydraulic PTO	20-30 l/min @ max 180 bar (2610.7 psi)

PNEUMATIC SYSTEM	
Type	Hydraulically driven single cylinder air compressor with automatic start/stop. An 8m recoil air hose with 1/4” quick connect is fitted inside the rig for use with air tools and tyre inflation equipment.
Flow (Max)	450 l/min
System Pressure (Max)	8 bar (116 psi)
Reservoir	4.3 L

MAIN FREE FALL WINCH	
Description	Hydraulically driven 2 speed winch with large centrifugal mass for “snappy feel”
	Multi plate pneumatically actuated clutch
	Multi plate pneumatically actuated brake with fail to safe actuation
	Large diameter 60/40 split drum: 90m of 16mm LH lay wireline

WINCH PERFORMANCE			
	Bare Drum	**Full Drum**	**Max Pull**
High Speed (Max)	70 m/min	157 m/min	3000 kgf
Low Speed (Max)	35 m/min	79 m/min	3000 kgf

TOOLING WINCH	
Type	Hydraulically driven winch to aid tool handling operation
Drum Capacity	38.5m of 6mm wireline
Max Line Speed	38 m/min
Max Pull	500 kg

ELECTRICAL SYSTEM	
Battery	12v. Fitted with isolator key
External Power	External heavy duty 12v plug socket to run lighting tripods
	Console is equipped with 12v charging socket

SAFETY FEATURES
3 emergency stop buttons
Spark arrestor
Over hoist switch
Fail to safe brake
Horn and warning beacon
LED lighting fitted as standard - 2 x lights mounted to mast body; 1 x lamp over main winch drum; 1 x console light
EN16228 compliant

OPTIONAL EQUIPMENT
Hydraulic Casing Jacks
Flotation Tyres - 24x13.00-12 6PR TL
Fire Extinguisher
Lighting Tripods
Tooling Storage
Chalwyn Valve

* Please note that the figures provided in this specification are subject to change in the future.

Trailer Mounted Dimensions

* Dimensions in mm

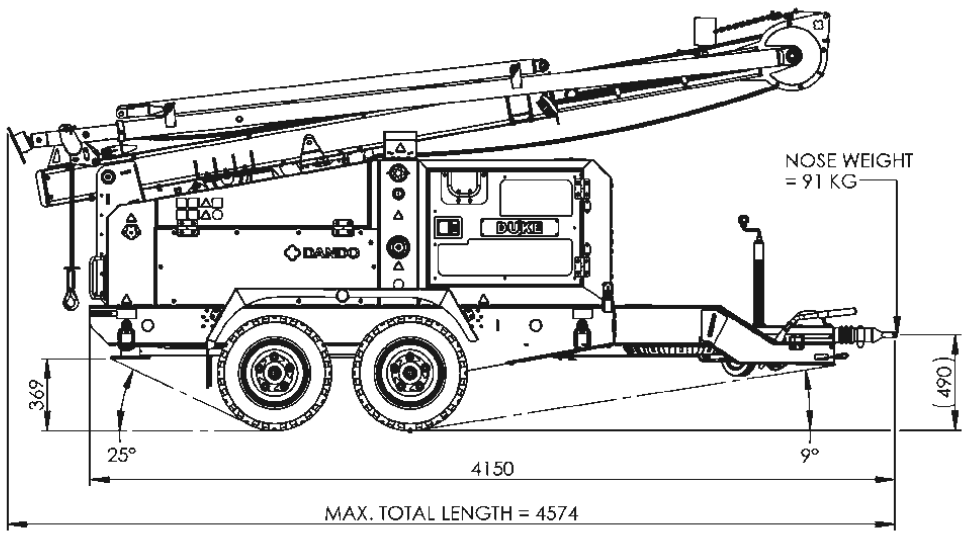

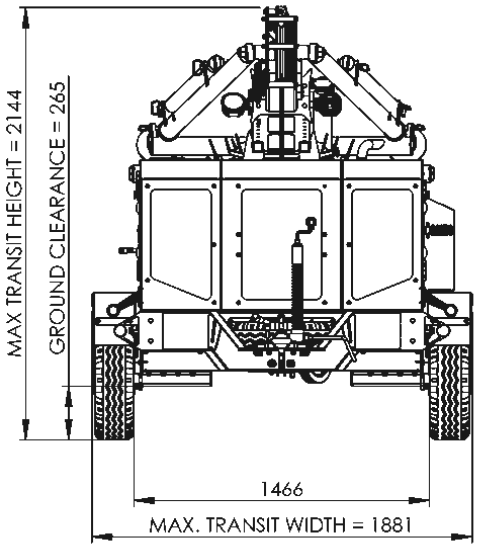

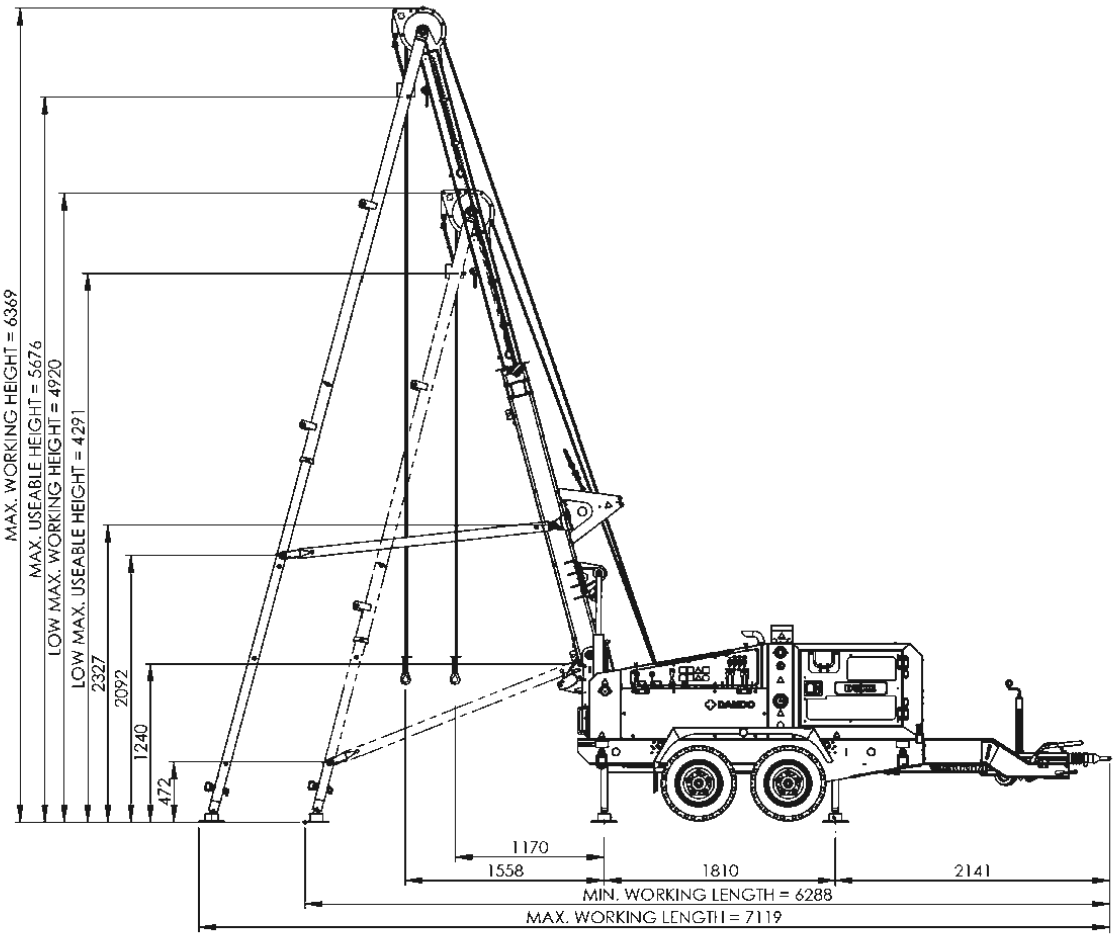

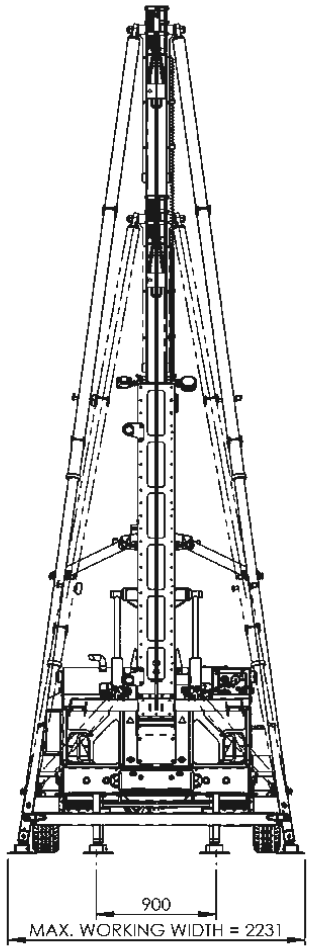

Track Mounted Dimensions

* Dimensions in mm

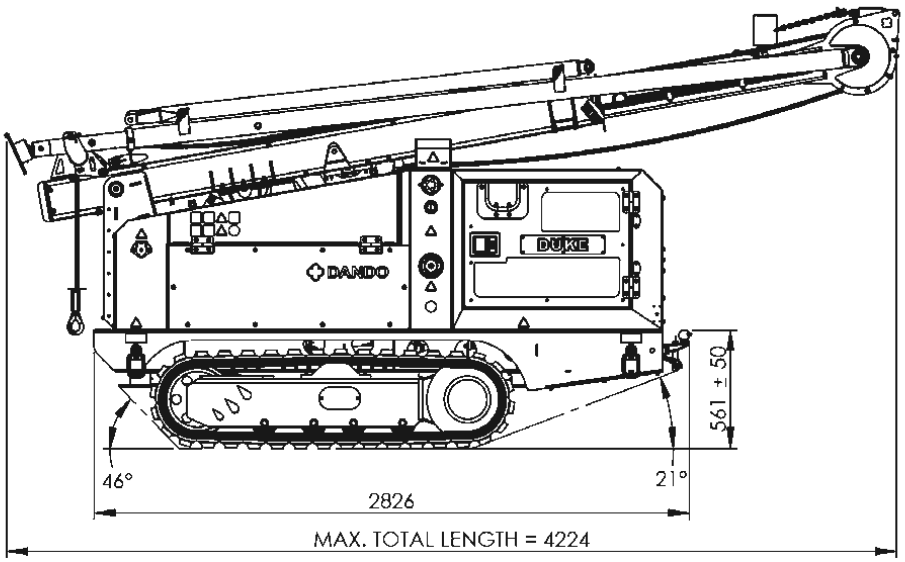

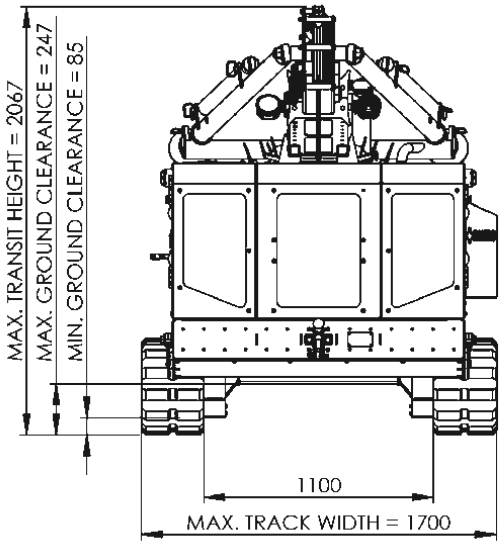

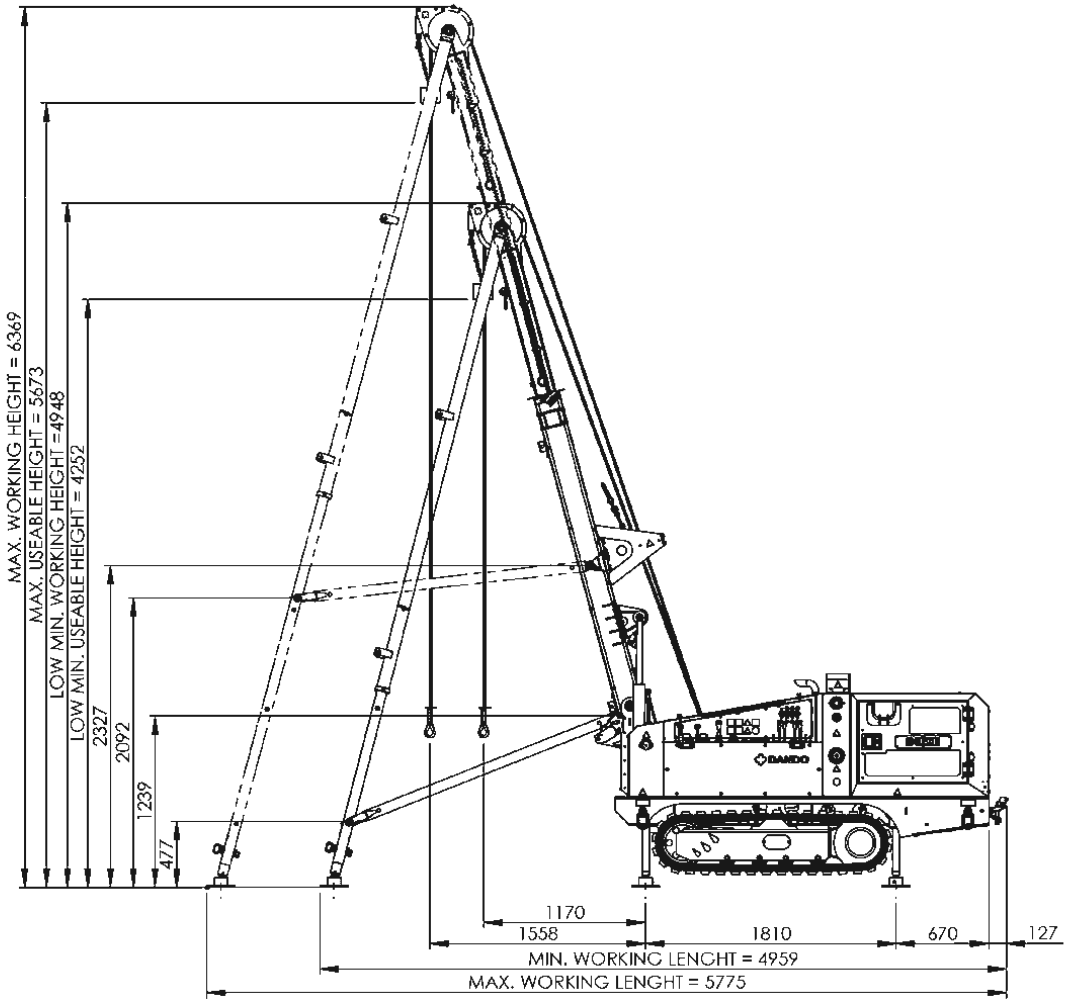

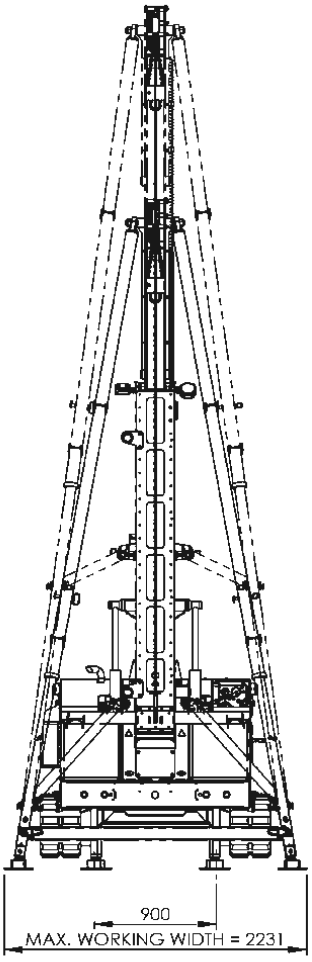

Please note: All figures and claims made here are indicative and Dando Drilling International reserves the right to make alterations to specification detail without notice. All images are for reference only and may not represent the exact specification outlined in this document. Please visit www.dando.co.uk for our Terms and Conditions

www.dando.co.uk
info@dando.co.uk
Tel: +44 (0)1903 731312

DANDO TERRIER

Designed for site investigation and environmental analysis, the Terrier's ultra-small footprint and crawler mounted design allows the user to carry out a wide range of sampling methods in confined spaces where access is limited. Available with percussive mast, rotary mast or both.

Percussive

Rotary

Interchangeable Masts

WWW.DANDO.CO.UK

Made in Britain since 1867

Versatility

The percussive Terrier is capable of disturbed and undisturbed sampling, SPT, U4 and dynamic probing. The rotary mast attachment extends the rig's range of use to include continuous flight and hollow stem augering, tricone & drag bits, rotary core drilling as well as DTH hammers.

2-Piece Drop Hammer

A 2-piece drop hammer for sampling and testing is incorporated in the mast assembly, with a hydraulic cylinder for recovery of casing and sampling tools.

Small Footprint

Mounted on a small crawler unit, the compact and extremely versatile Dando Terrier is capable of a wide range of drilling techniques in areas of restricted space and difficult access. The rig can even fit through a standard doorway.

Easy Transportation

The Terrier can be tracked easily across difficult terrain and through tight spaces, causing very little disturbance to its surroundings. Its compact design also allows for easy transportation to and from site by van, trailer or large pickup truck.

*All images are for reference only and may not represent the exact specification outlined in this document.

Detachable Mast

The entire percussive mast assembly can be detached from the main superstructure for operation in areas where access and space are particularly limited.

Inclined Slopes

A hydraulic tilting undercarriage allows operation on inclined slopes up to 30 degrees from horizontal.

On-board Storage

The rig's deck area includes storage space for all required drilling tools and accessories.

Concrete Coring

Available as an option, the rotary concrete coring head is useful for when concrete and tarmac overlie the area to be sampled.

Rotary Drilling Version

The Terrier is also available as an ultra-compact multipurpose rotary drilling rig capable of:

- Continuous flight and hollow stem augering
- Drilling with tricone & drag bits
- Rotary core drilling
- DTH hammer drilling
- Rotary Air Blast (RAB)

The interchangeable mast option allows the operator to switch easily between rotary and percussive drilling.

19 HP Engine

Now fitted with a 3 cylinder 19 HP diesel engine providing increased power and smoother operation. Easy to access for simple maintenance.

Tender Percussive Specification

CHASSIS	
Description	Purpose built crawler chassis with rubber tracks
	Incorporates controls, engine mounting and tool storage
	Steel deck fitted with tilt mechanism

ENGINE	
Type	19 HP water cooled 3 cylinder diesel engine. Other options available.

MAST ASSEMBLY	
Description	Steel mast hydraulically raised and lowered. Entire mast assembly can be detached from the main superstructure for operation in areas of restricted space. 1m measurement scale for easy monitoring of depth progress
Working Stroke	1.3m stroke
Head Travel Speed Up	12 m/min (39 ft/min)
Head Travel Speed Down	17 m/min (55 ft/min)
Pullback	5000 kgf (11023 lbf)

DRIVE HAMMER	
Description	Two-piece drive hammer running on 2 guide bars
	Fully guarded weight
Hammer Speed	0-50 blows pm
Hammer Drop	500-750 mm
Hammer Weight	50 kg or 63.5 kg

CONTROL PANEL	
Drilling Controls	Located at the side of the rig. Includes emergency stop
Tracking Controls	Located at rear of the rig, with folding foot plate. Option: Radio remote control tracking

STABILISERS	
Type	Removable stabiliser legs

HYDRAULIC PTO	
Max. Flow for PTO	48 lpm
Max. Working Pressure	152 bar

OPTIONAL EQUIPMENT
Rotary concrete coring head
Remote drilling kit - the whole control panel and mast can be removed and operated at up to 30m away from the main base unit
Casing extractor

Rotary Specification

ROTARY HEAD	
Description	Driven by a hydraulic motor fitted with a 2 speed gearbox with manual gear change. 3/4" integral side inlet air/water swivel with BW rod connection.
Motor	63, 75 or 160 cc. Other options available
Guide Ring	200 mm effective ID. Other options available
Gearbox Ratio	7:1 - 1:1

ROTARY HEAD MOTOR OPTION 1 *		
Motor	63 cc	
High Range	Max Torque: 140 nm/ 103 ft-lb	Max Spindle Speed: 600 rpm
Low Range:	Max Torque: 980 nm/ 723 ft-lb	Max Spindle Speed: 85 rpm

ROTARY HEAD MOTOR OPTION 2 *		
Motor	75 cc	
High Range	Max Torque: 180 nm/ 133 ft-lb	Max Spindle Speed: 470 rpm
Low Range:	Max Torque: 1260 nm/ 929 ft-lb	Max Spindle Speed: 70 rpm

ROTARY HEAD MOTOR OPTION 3*		
Motor	150 cc	
High Range	Max Torque: 320 nm/ 236 ft-lb	Max Spindle Speed: 250 rpm
Low Range:	Max Torque: 2240 nm/ 1652 ft-lb	Max Spindle Speed: 35 rpm

*Head performance figures are theoretical. Speeds given are for an unloaded head

FEED AND HOIST SYSTEM	
Description	Provided by a single double-acting ram transmitting adjustable hydraulic load to the rotary head.
Head Travel Speed Up	11.5 m/min (37.7 ft/min)
Head Travel Speed Down	16 m/min (52.5 ft/min)
Pullback	5000 kgf (11023 lbf)
Pulldown	500 kgf (1102 lbf)
Working Stroke	2.2 m to accommodate 1.5 m effective length drill rods
Drilling Inclination	45° to 90° (Optional)

SAFETY FEATURES
2 emergency stop buttons
Hydraulic system protection via relief valves
Safety cage

OPTIONAL EQUIPMENT
Chalwyn valve and spark arrestor
Wireless remote for tracking
Casing extractor
Angle drilling to 45°

Percussive Terrier Dimensions

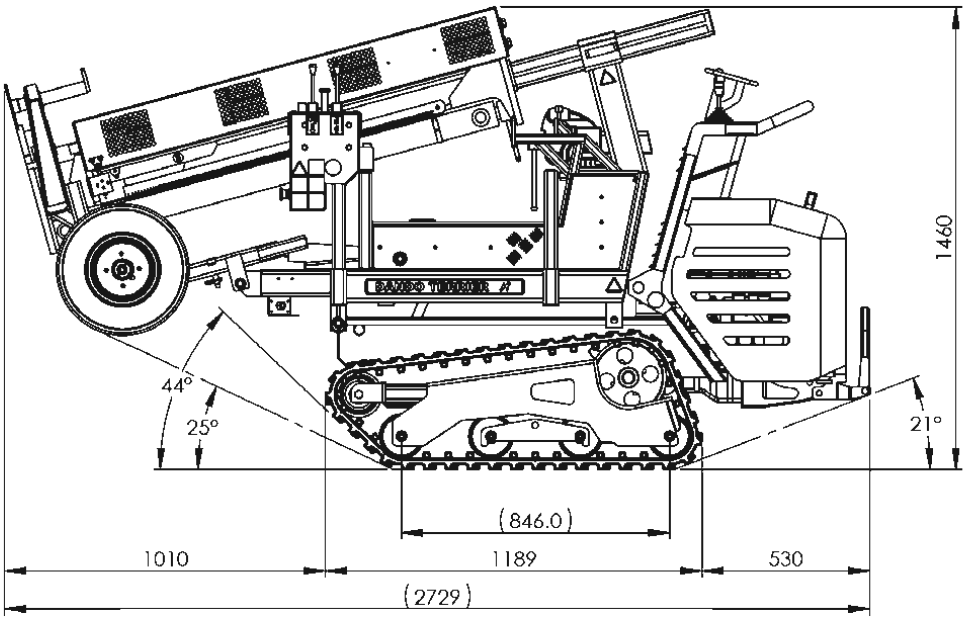

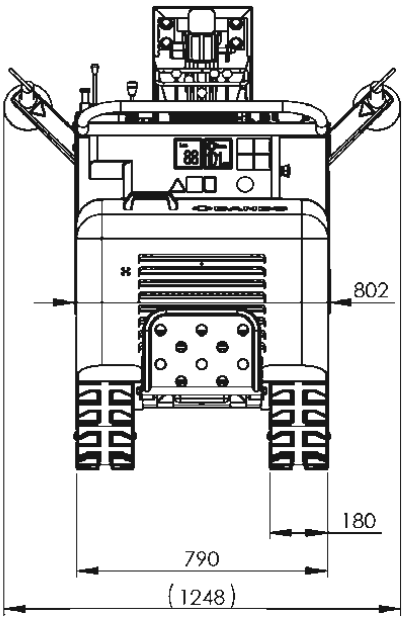

WEIGHT	
Base	830 kg (1830 lb)
Mast	336 kg (740 lb)
Total	1166 kg (2570 lb)

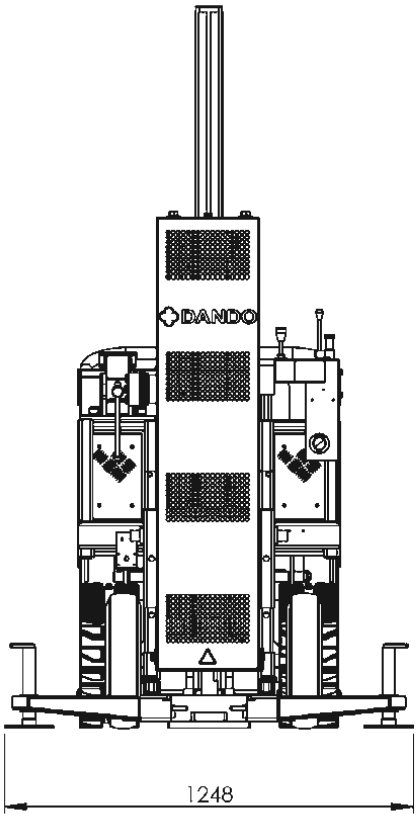

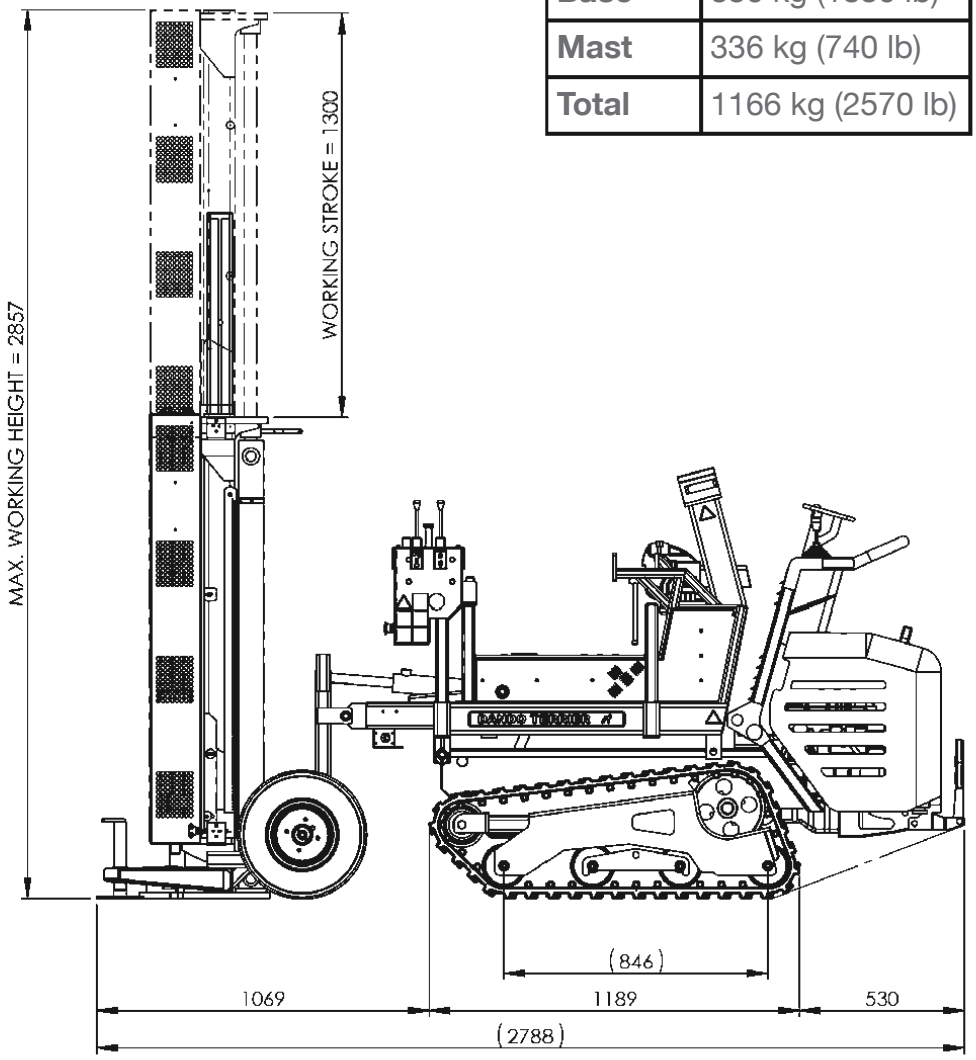

Rotary Terrier Dimensions

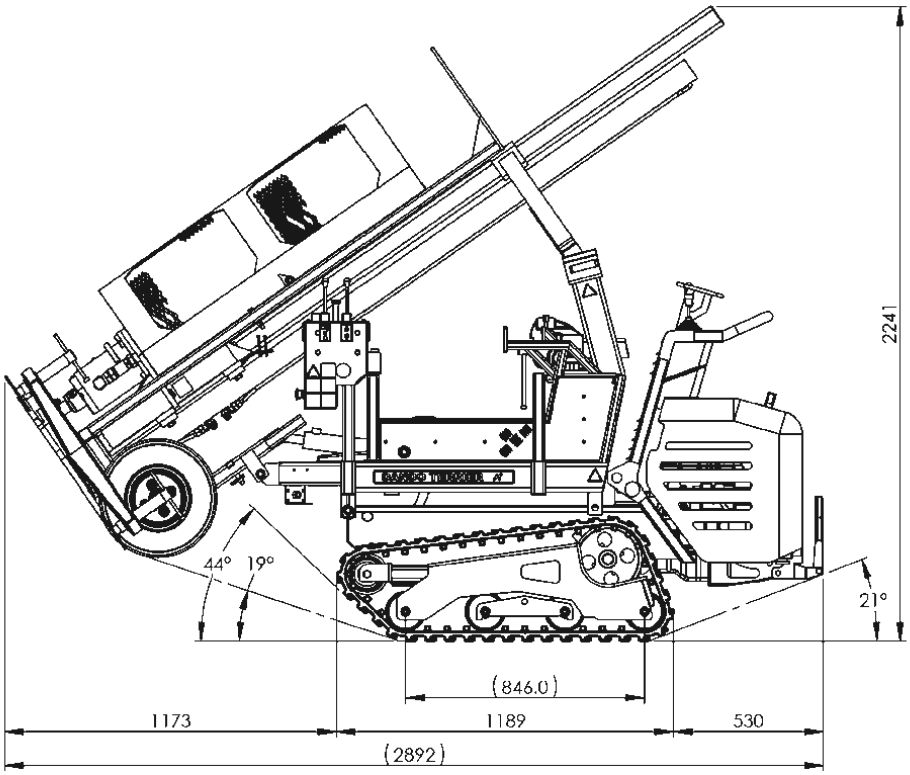

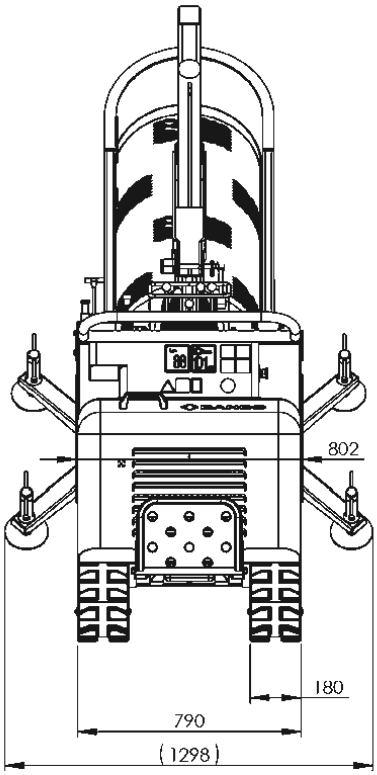

WEIGHT	
Base	830 kg (1830 lb)
Mast	408 kg (899 lb)
Total	1238 kg (2729 lb)

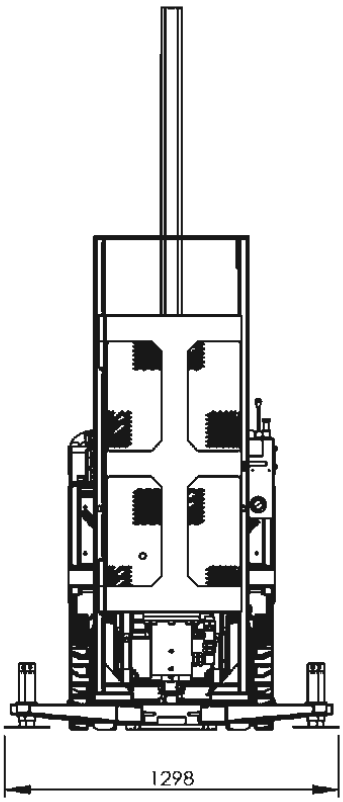

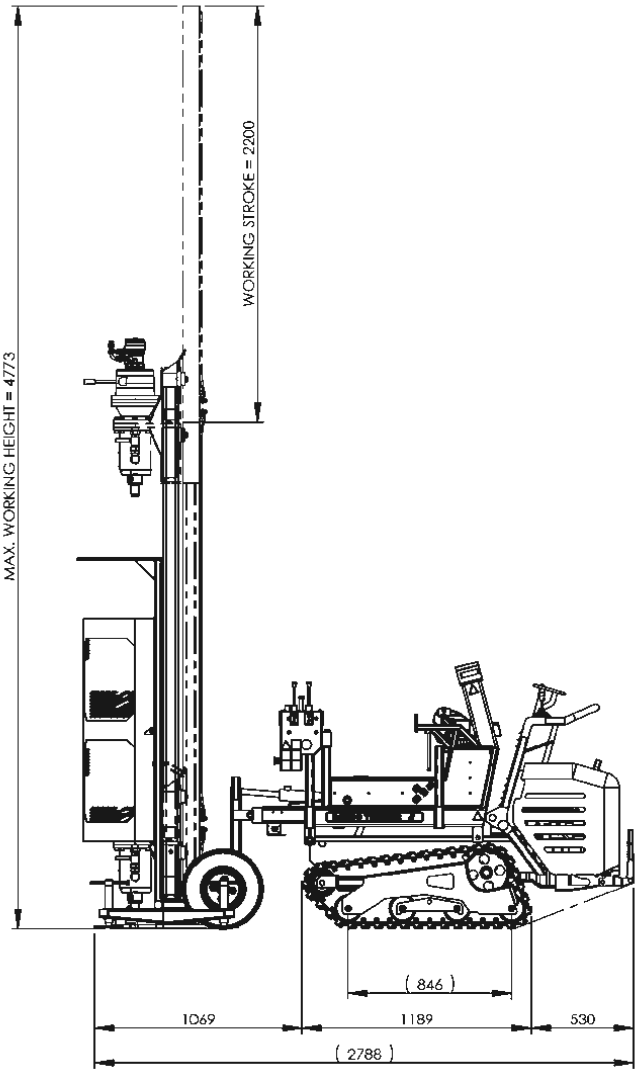

Please note: All figures and claims made here are indicative and Dando Drilling International reserves the right to make alterations to specification detail without notice. All images are for reference only and may not represent the exact specification outlined in this document. Please visit www.dando.co.uk for our Terms and Conditions

Dando Drilling International Ltd
www.dando.co.uk
info@dando.co.uk
+44 (0)1903 731312

GEO 205

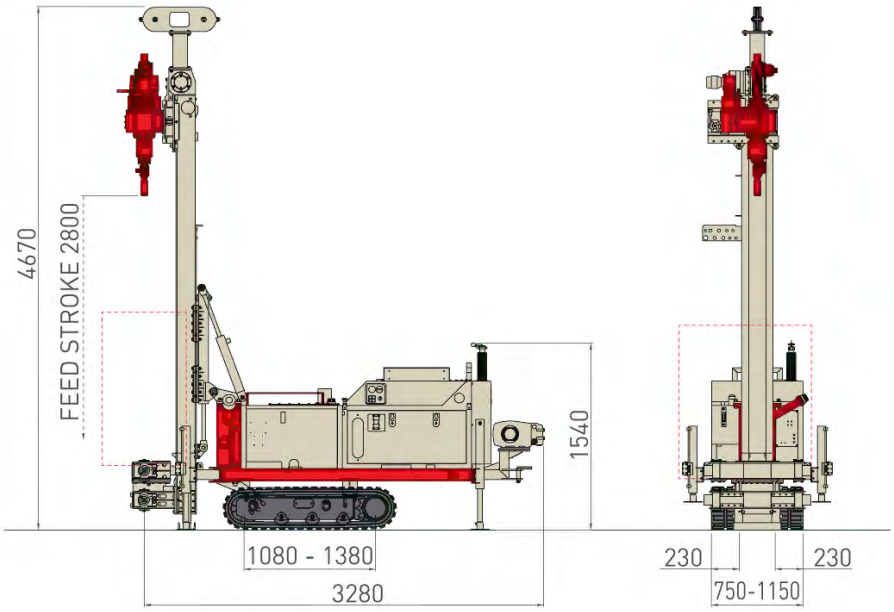

	m.s.	i.s.		
Potenza Motore *Engine Power*	kW	HP	33	44
Livello Emissioni *Emission Level*	-		Step 3A / Tier 4i	
Corsa Mast *Mast Feed Stroke*	mm	ft	1.030 - 2.800	3.4 - 9.2
Forza di Spinta *Feed Force*	daN	lbs	2.500	5,620
Forza di Tiro *Retract Force*	daN	lbs	2.500	5,620
Coppia Rotary *Rotary Torque Range*	daNm	lb*ft	200 - 480	1,475 - 3,540
Giri Rotary *Rotary Speed Range*	rpm		80 - 580	
Serraggio Morse *Clamp Range*	mm	in	45 - 220	1.8 - 8.6
Peso Perforatrice *Rig Weight*	kg	lbs	2.400 - 2.800	5,300 -6,200

Specifications shown are only indicative and subjected to change without prior notice

¡This is a simplified data sheet that does not show all possible rig configurations. For further information click here.

GEO 405

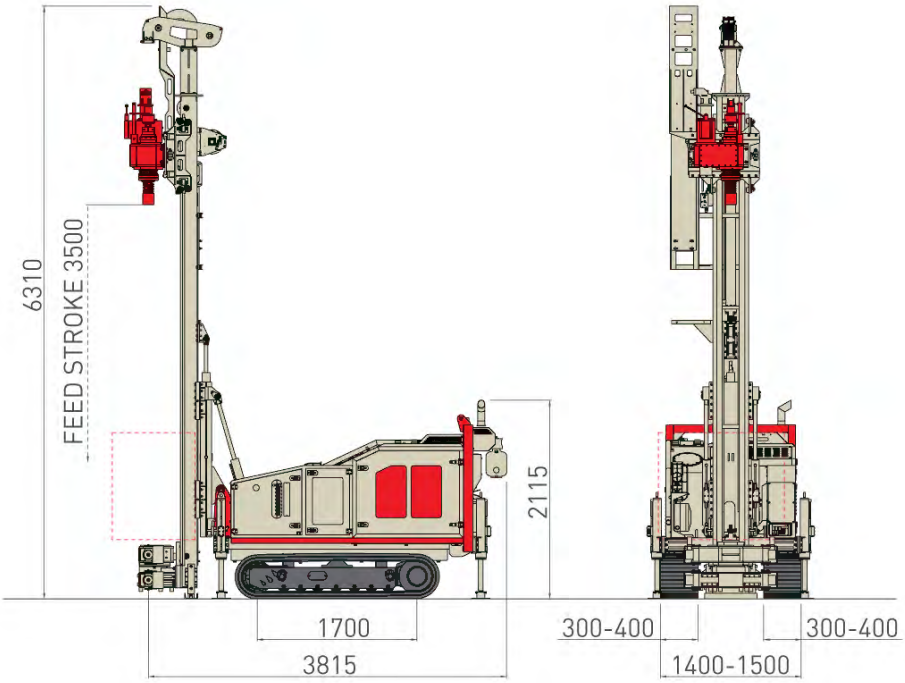

	m.s.	i.s.		
Potenza Motore *Engine Power*	kW	HP	55 - 74	74 - 99
Livello Emissioni *Emission Level*	-		Step 3A/Tier 3 - **Step 5 / Tier 4f (HT Line)**	
Corsa Mast *Mast Feed Stroke*	mm	ft	2.500 - 3.500	8.2 - 11.5
Forza di Spinta *Feed Force*	daN	lbs	4.500	10,116
Forza di Tiro *Retract Force*	daN	lbs	6.500	14,612
Coppia Rotary *Rotary Torque Range*	daNm	lb*ft	450 - 1.400	3,319 - 10,325
Giri Rotary *Rotary Speed Range*	rpm		55 - 980	
Serraggio Morse *Clamp Range*	mm	in	45 - 325	1.8 - 12.8
Peso Perforatrice *Rig Weight*	kg	lbs	5.800 - 7.000	12,800 - 15,400

Specifications shown are only indicative and subjected to change without prior notice

This is a simplified data sheet that does not show all possible rig configurations. For further information click here.