Scheme to promote use of more Selective Fishing Gear in the Irish Nephrops Fishery

The Department of Agriculture, Food and the Marine invites applications from the owners of Irish registered and licensed fishing boats who are interested in participating in a scheme for the use of selective fishing gears in the Irish Nephrops Fishery (ICES Area VII). **Closing date for receipt of applications is Monday 21st May 2018.**

Purpose of the Nephrops Scheme

The purpose of the Nephrops scheme is to promote the use of more selective fishing gear in the Nephrops fishery. The intention is to promote the use of fishing gears that have demonstrated the escape of unwanted catches, in particular (i) small Nephrops and (ii) small and/or quota limited whitefish such as cod, whiting, haddock and black sole.

Summary of gear options which address the purpose of the Nephrops Scheme

BIM and the Irish fishing industry have conducted extensive work on developing and testing measures to reduce unwanted catches in the Nephrops fishery which are relevant to the purpose of this scheme.

For this scheme a minimum codend mesh size of 80 mm is mandatory for all vessels. This substantially reduces catches of below minimum conservation reference size (MCRS) Nephrops.

The SELTRA 300 is highly effective in reducing catches of haddock, whiting, cod, flatfish species and lesser spotted dogfish while retaining catches of Nephrops and larger fish species such as monkfish. The SELTRA 300 is more effective than the traditional 300 mm square-mesh panel in reducing fish and retaining Nephrops catches.

The Swedish grid excludes most fish while retaining Nephrops catches.

The dual codend separates catches of fish and Nephrops into two codends facilitating implementation of alternative selectivity measures for different species. This measure is highly effective in reducing catches of small whiting and haddock while retaining market sized catches of all species.

The SELTRA 140 which is used in the North Sea also reduces haddock and whiting but generally retains more fish than the SELTRA 300. This provides a lighter, easier to tow option compared with the dual codend for small vessels that wish to retain fish as well as Nephrops.

Specified gears for the purposes of the Nephrops Scheme are:

Gear type	Vessel	Area
SELTRA 300 square mesh panel*	All vessels	All areas
Swedish grid*	All vessels	All areas
Dual codend*	All vessels	All areas except VIIa
SELTRA 140 square or 270 diamond mesh panel*	All vessels less than 12m	All areas except VIIa

*Must be used with a codend mesh size greater or equal to 80 mm

Detailed specifications for these gears are provided in Annex I. **Use of these gears must comply with current technical measures regulations.** These gears are eligible for grant aid under the BIM Sustainable Fisheries Scheme.

Incentive to use more selective gears

- The scheme will operate on a 3 month basis, with the first scheme commencing on 01 June 2018 for the three month period ending on 31 August 2018.
- For each 3 month period, licence holders must commit to exclusively using the BIM specified gear options when targeting nephrops. *"Target Species" is as provided for in Council Regulation (EC) No 850/98 of 30 March 1998 for the conservation of fishery resources through technical measures for the protection of juveniles of marine organisms, as amended.*
- The vessel of any licence holder who receives an authorisation for the scheme will be given access to enhanced Nephrops quota in ICES Area VII (excluding Functional Unit 16 of Sub area VII (Porcupine)). This will result in the vessel receiving plus 20% of the available quota for that vessel as set down in the Fisheries Management Notice for Nephrops in area VII **excluding** Functional Unit 16 for each of the 3 months of June, July and August.
- Vessel owners who apply to participate in this scheme and receive an authorisation will thereafter refer to the fishery management notice which will set out the catch limit for the management period.
- The vessel must have the necessary effort authorisation as required for area VIIa, where applicable (*not required for vessel to fish exclusively in Area VII, excluding VIIa*).
- Vessels authorised under the Monkfish Scheme are not permitted to apply.

Additional Conditions

Licence holders who participate in the scheme must at the commencement of the period confirm with the SFPA by means of a port inspection that it is using one of the specified gears that are within the ambit of this scheme. If a participant wishes to change from one authorised gear to another during the course of a three month period, they must notify the SFPA in writing and arrange a port inspection of the new gear before any fishing trip using the new gear commences.

The licence holder must undertake to carry Marine Institute data collection observers for up to 10 days at sea during each 3 month period. The MI will contact all vessels in the scheme in advance of the first trip to arrange sampling trips within the period, for specified dates determined with the MI. Where possible discard sampling of the "standard" and "specified gear" will be carried out for up to 10 hauls during the trip when the (MI) observer is on board the vessel. If an observer is not accommodated on the dates agreed in advance with the MI, the vessel will be deemed to have not fulfilled the conditions of the scheme and the Minister in accordance with section 13 of the Sea-Fisheries and Maritime Jurisdiction Act 2006 may revoke or withdraw that vessels authorisation for the scheme and that vessel may not continue to participate in the scheme or future scheme(s) for the following 12 months.

The license holder must complete a BIM Fishing Trip Economic Survey form once during each 3 month period.

Vessel selection process

In the combined 3 month period 01 June to 31 August, the scheme will be confined to 10 vessels. In the event that more than 10 vessels express an interest, the Minister will allow an open draw to take place details as follows:

- The Scheme will be advertised on the Irish Independent and via e-mail to the Quota Management Advisory committee.
- A notice will also be placed on the Department's website.
- Closing date for receipt of applications is Monday 21 May 2018.
- All applicants will be asked to confirm their willingness to be entered in an open draw.
- 10 vessels will be drawn in the lottery and offered an authorisation.
- A reserve list will be created.
- The draw will take place in the Department's offices in Clonakilty on Tuesday 22 May 2018.
- One representative from each of the following organisations: IS&WFPO, KFO, IFPO, IS&EFO and IFPEA will be invited to attend if they so wish.
- An independent observer will also be invited to oversee proceedings.
- Authorisations will be made available following the lottery.

May 2018

Annex I. Detailed specification of gears for the purpose of the Nephrops scheme

SELTRA 300

The "SELTRA 300 panel" is a selectivity device consisting of a top panel of at least 300 mm square mesh placed in a four panel section. The SELTRA 300 panel shall be at least 3 m long, positioned no more than 4 metres from the cod-line and shall be the full width of the trawl's top sheet (i.e. from selvedge to selvedge).

Notwithstanding Commission Regulation (EC) No 3440/84, no attachments or devices that obstruct or otherwise effectively diminish the mesh size of any part of the SELTRA 300 panel or any part of the towed gear shall be used.

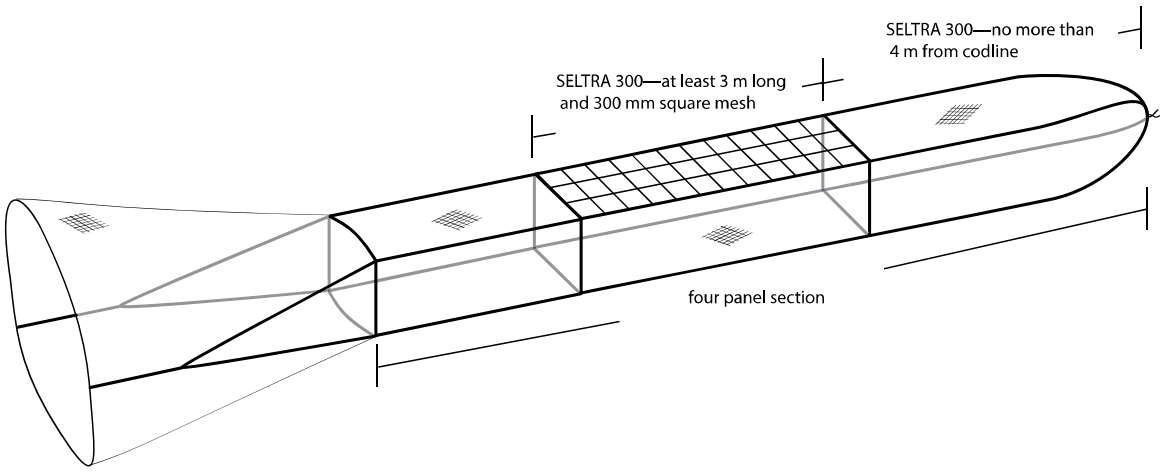

Swedish grid

The 'Swedish grid' is a selectivity device that is placed diagonally (upwards and backwards) in the trawl, anywhere from just in front of the codend to the anterior end of the un-tapered section. All sides of the grid shall be attached to the trawl. The grid shall be constructed from a material that forms a robust rectangular shape with parallel bars arranged to the longitudinal axis of the grid. The grid shall have a bar spacing that will not exceed 35 mm and use of one or more hinges shall be permitted in order to facilitate its storage on a net drum. In the upper panel of the trawl there shall be a cutaway section anterior to the upper side of the grid. The cutaway section shall have the same width in the posterior side as the width of the grid and shall be cut out to a tip in the anterior direction along mesh bars from both sides of the grid. The grid will be of a size that when attached to the trawl, it will not restrict the mesh openings, immediately adjacent.

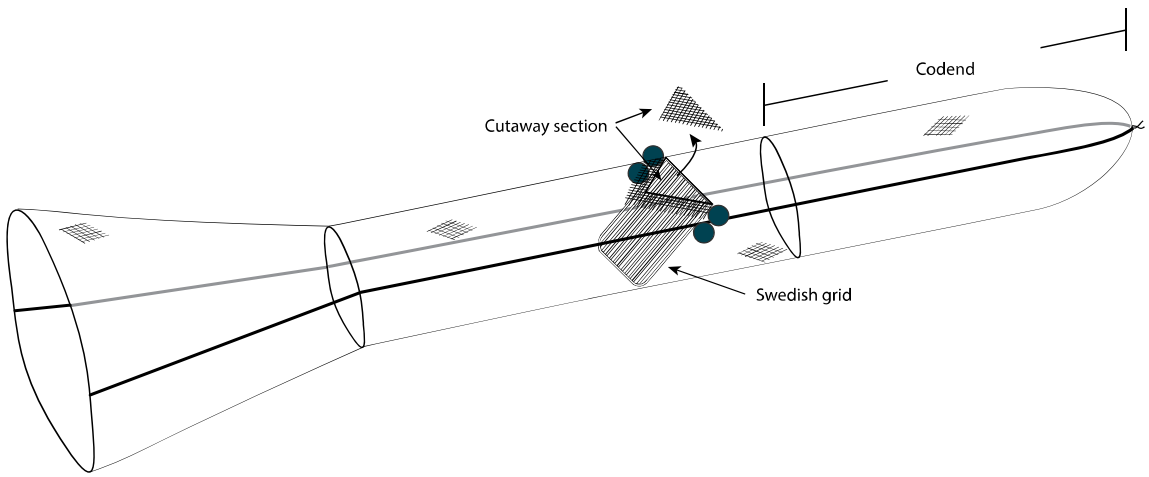

Dual codend

The "dual codend" is a selectivity device consisting of a separator section (with anterior and posterior separator panels), a square mesh panel and two codends. The un-tapered four-panel separator section shall be at least 8m long and having a circumference at least equal to both codends.

The anterior panel shall be at least 5 m long and constructed from at least 300 mm square mesh. The anterior panel shall be connected to the bottom panel and both side panels terminating 8 open meshes from the top panel.

The posterior panel shall be at least 2.5 m long and constructed from at least 80 mm diamond mesh. The posterior panel shall be connected to the rear edge of the anterior panel, both side panels and the upper codend's bottom panel.

An extension piece may be attached between the separator section and the codend but it shall not exceed the length of the codend.

The top codend shall be T90 mesh (diamond mesh turned 90°) with a codend mesh size greater or equal to 90 mm.

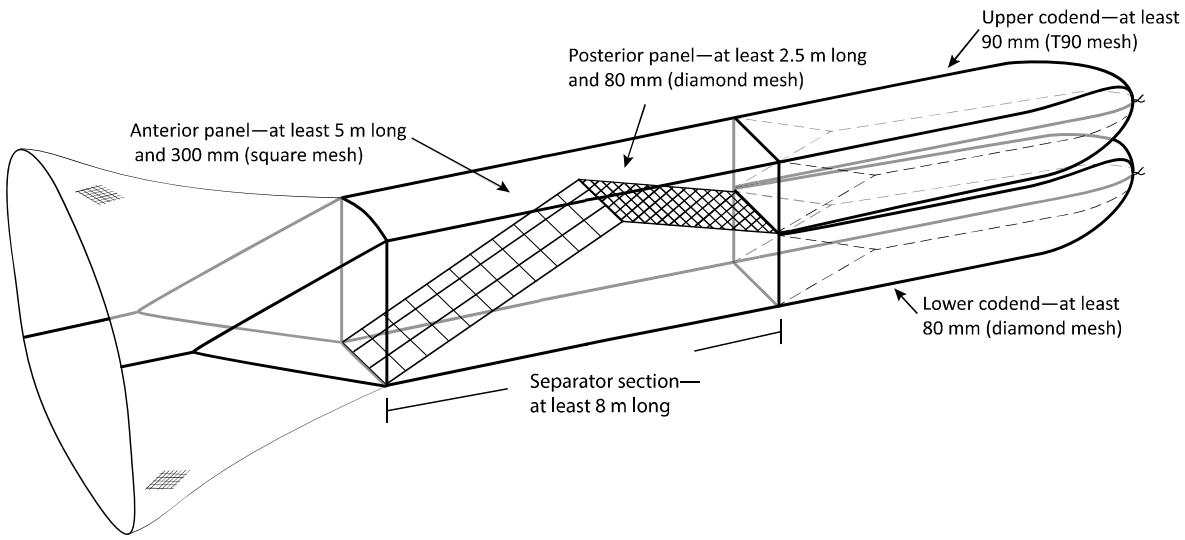

SELTRA 140

The "SELTRA 140 panel" is a selectivity device consisting of a top panel of at least 140 mm square mesh or 270 mm diamond mesh placed in a four panel section. The SELTRA 140 panel shall be at least 3 m long, positioned no more than 4 metres from the cod-line and shall be the full width of the trawl's top sheet (i.e. from selvedge to selvedge).
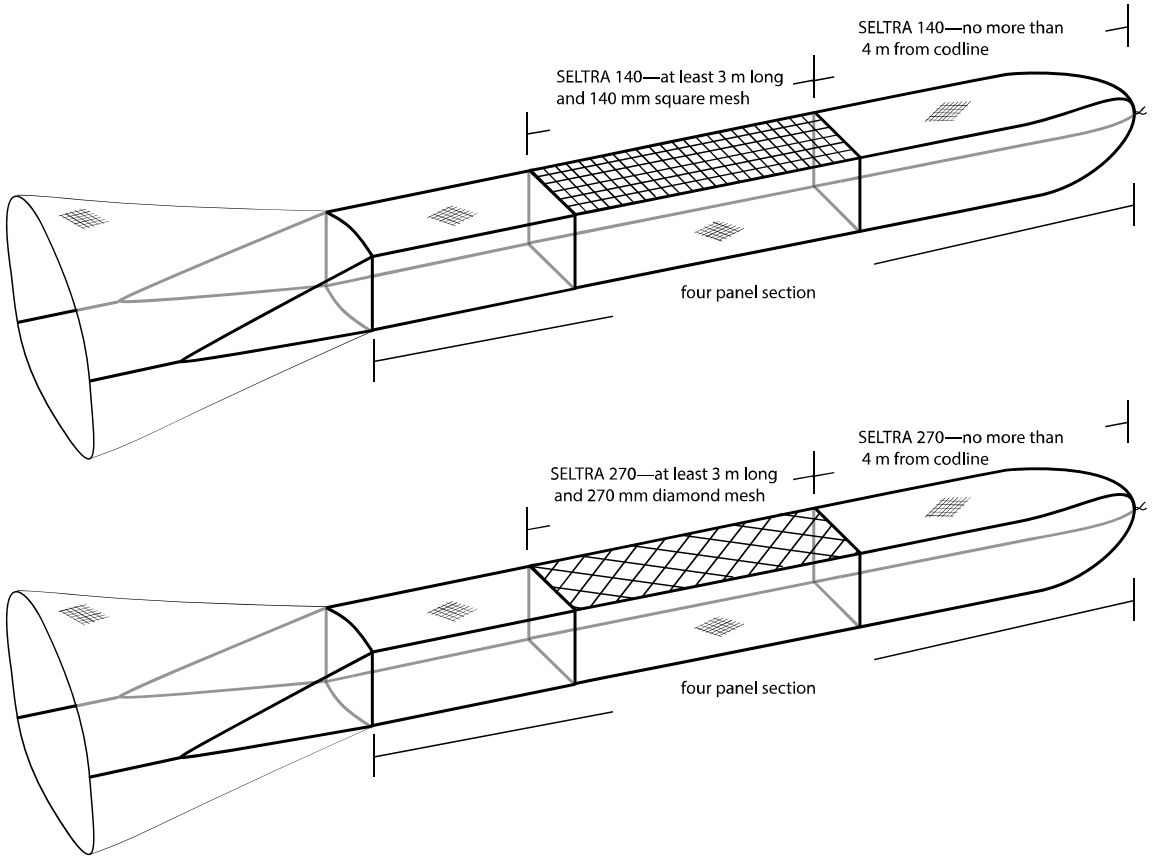
Notwithstanding Commission Regulation (EC) No 3440/84, no attachments or devices that obstruct or otherwise effectively diminish the mesh size of any part of the SELTRA 140 panel or any part of the towed gear shall be used.